CANADIAN BROOMBALL FEDERATION INC.

FÉDÉRATION CANADIENNE DE BALLON SUR GLACE INC.

RULEBOOK
2025-2027
RÈGLEMENTS

Canada

RULES

FOR THE USE

OF THE

CANADIAN BROOMBALL FEDERATION

Canadian Broomball Federation
145 Pacific Avenue
Winnipeg, MB R3B 2Z6
Email: cbfbroomball@shaw.ca
Website: www.broomball.ca

Rule Book Effective July 1, 2025

21ST EDITION

Cover design: Lucie Fillon - Quebec
Word Processing by: Canadian Broomball Federation
Commission de l'execellence du ballon sur glace inc. 1985

All rights for translation or adaption, in whole or in part are reserved in all countries. The reproduction of any portion of the book, by any process whatsoever, mechanical or electronic, particularly by photocopy of microfilm, is strictly forbidden without the consent of the Canadian Broomball Federation.

Ottawa 1985.
Depot legal, 4e trimestre 1985, Bibliotheque nationale du Quebec
Printed in Canada
Imprime au Canada

1st Edition, 1985 - Quebec
2nd Edition, 1988 - Winnipeg
3rd Edition, 1989 - Winnipeg
4th Edition, 1990
5th Edition, 1991
6th Edition, 1993
7th Edition, 1997
8th Edition, 2000 - Winnipeg
9th Edition, 2001 - Winnipeg
10th Edition, 2003 - Winnipeg
11th Edition, 2005 - Winnipeg
12th Edition, 2007 - Winnipeg
13th Edition, 2009 - Winnipeg
14th Edition, 2011 - Winnipeg
15th Edition, 2013 - Winnipeg
16th Edition, 2015 - Winnipeg
17th Edition, 2017 - Winnipeg
18th Edition, 2019 - Winnipeg
19th Edition, 2021 – Winnipeg
20th Edition, 2023 – Winnipeg
21st Edition, 2025 - Winnipeg

PREFACE/FORWARD

CANADIAN BROOMBALL FEDERATION

Message from the Board of Directors

The rules which are contained in this book are the only rules which are to be used in the playing of Broomball under the jurisdiction of the Canadian Broomball Federation. The rules are written with the intent to provide reasonable safety, to create an atmosphere of sportsmanship, fair play and to provide skill development.

It is understandable that in a country of the extent of Canada, a uniform interpretation of the rules may prove somewhat difficult. That, however, is the goal to which we must aim, and if the rules are strictly adhered to in all parts of Canada, it should not be hard to come near to achieving that goal.

If the referee has any difficulty in the interpretation of any rule, he should consult with the person or persons in his Provincial/Territorial Association who have been designated to settle matters of this kind. If such persons cannot give a satisfactory interpretation, they in turn should contact the C.B.F. Referee-in-Chief.

These rules shall assure strong competitors their right to pursue excellence, beginners their right to be initiated in complete safety, recreational players their right to a relaxed atmosphere and all participants their right to surpass themselves.

PROVINCIAL/TERRITORIAL BROOMBALL ASSOCIATIONS:

Broomball Newfoundland & Labrador

Canadian Forces

Maritimes Broomball Association

Fédération Québécoise de Ballon sur Glace

Federation of Broomball Associations of Ontario

Manitoba Amateur Broomball Association

Saskatchewan Broomball Association

Alberta Broomball Association

Northwest Territories Broomball Association

Yukon Broomball Association

EISRA (Eeyou Istchee Sports and Recreation Association)

TABLE OF CONTENTS

Preface/Forward i
Provincial/Territorial Broomball Associations ii
Table of Contents iii

CHAPTER ONE - THE RINK

Article 1 The Rink 1
Article 2 The Ice Surface 1
Article 3 Dimensions of the Ice Surface 1
Article 4 Division of the Ice Surface 2
Article 5 Center Ice Spot and Circle 3
Article 6 Neutral Face-off Spot 3
Article 7 Face-off Spots and Circles in the End Zones 4
Article 8 The Goal Posts and Nets 5
Article 9 The Goal Crease 6
Article 10 The Team Bench 7
Article 11 The Penalty Bench 7
Article 12 The Doors 8
Article 13 The Officials' Crease 8
Article 14 Timing Devices 8
Article 15 The Dressing Rooms 8
Article 16 Ice Surface Lighting 9
Article 17 Installations 9
Article 18 First Aid 9
Article 19 Names and Telephone Numbers 9
Article 20 Emergency Vehicles 10
Article 21 Hospital 10
Article 22 Penalty to the Organizer 10

CHAPTER TWO - EQUIPMENT

Article 23 The Broom 10
Article 24 The Ball 11
Article 25 Broomball Shoes 11
Article 26 Pants 12
Article 27 Sweater 12
Article 28 A Player's Protective Equipment 12
Article 29 Goaltender's Equipment 13

CHAPTER THREE - THE TEAM

Article 30 Team Captain or Assistant-Captain 14
Article 31 The Coach 14
Article 32 The Trainer 15

CHAPTER FOUR - THE OFFICIALS

Article 33 The Officials 15
Article 34 Code of Conduct 16
Article 35 Substitution of an Official 16
Article 36 Incident Report 17
Article 37 Accident Report 17
Article 38 Participating While Under the Influence 17
Article 39 The Scorer 17
Article 40 The Game Timekeeper 18
Article 41 The Penalty Timekeeper 18
Article 42 Goal Judges 19

CHAPTER FIVE - THE GAME

Article 43 Duration of the Game and Periods 19
Article 44 Name List 20
Article 45 Team Short Of Players 20
Article 46 Too Many Players 20
Article 47 Initial Line-up 20
Article 48 Beginning of the Game and Periods 21
Article 49 Overtime Period 21
Article 50 Protest 22
Article 51 Result of the Official Game 23

CHAPTER SIX - PLAY IN PROGRESS

Article 52 Goals 23
Article 53 Assists 24
Article 54 Scoring Classification 24
Article 55 Substitution 24
Article 56 The Accepted Pass 26
Article 57 Face-off 26
Article 58 Position of the Players Facing-off 26
Article 59 Position of the Other Players at the Face-off 27
Article 60 Face-off Execution 27
Article 61 Regulation Determining Face-off Locations 28
Article 62 Off-side at the Central Red line 28

Article 63 Icing 29
Article 64 Hidden Ball 30
Article 65 Legal Handing Over of the Broom 30
Article 66 Dropped Broom 30
Article 67 Refusing to Play the Ball 30
Article 68 Refusing to Progress with the Ball 30
Article 69 Ball Unplayable or Off the Ice Surface 31
Article 70 Illegal Ball 31
Article 71 Ball Touching an Official 31
Article 72 Illegal Ball in the Goal Crease 31
Article 73 Legal Contact 31
Article 74 Broomball Contact Higher than the Shoulders 32
Article 75 Stoppage of Play Because of Injury 32

CHAPTER SEVEN - TYPES OF PENALTIES

Article 76 Types of Penalties 33
Article 77 Penalties 33
Article 78 Minor Penalty 35
Article 79 Minor Team Penalty 35
Article 80 Simultaneous Minor Penalties 35
Article 81 Major Penalty 36
Article 82 Second Major Penalty 36
Article 83 Major Team Penalty 36
Article 84 Simultaneous Major Penalties 36
Article 85 Misconduct Penalty 37
Article 86 Second Misconduct Penalty 37
Article 87 Misconduct Team Penalty 37
Article 88 Game Misconduct Penalty 37
Article 89 Match Penalty 38
Article 90 Second Match Penalty 38
Article 91 Penalty Shot 38
Article 92 Goal Awarded By Decision 39
Article 93 Game Awarded by Decision 39
Article 94 Penalty Procedures 40
Article 95 Arbitration Mistake 40

CHAPTER EIGHT - INFRACTIONS

Article 96 Illegal Substitution 41
Article 97 Forbidden Adjustment of Equipment 41
Article 98 Interfering with Play 41
Article 99 Forbidden Freezing of the Ball 41
Article 100 Goaltender in the Offensive Territory 42
Article 101 Delay of Game 42

Article 102 Refusing to Start Play 43
Article 103 Needless Disturbance 44
Article 104 Leaving the Team Bench or the Penalty Bench 44
Article 105 Required Equipment and Equipment Verification 45
Article 106 Forbidden or Illegal Equipment 46
Article 107 Playing with a Broken Broom 46
Article 108 Playing in Possession of Two Brooms 47
Article 109 Illegal Face-off 47
Article 110 Illegal Interpretation Request 47
Article 111 Team Unsportsmanlike Conduct 47
Article 112 Unsportsmanlike Conduct 48
Article 113 Unsportsmanlike Conduct towards the Officials 48
Article 114 Throwing an Object 49
Article 115 Interference 49
Article 116 Holding 50
Article 117 Tripping 50
Article 118 Slew-Footing 50
Article 119 Obstructive Fall 51
Article 120 Hooking 51
Article 121 Slashing 51
Article 122 Kneeing or Elbowing 52
Article 123 Charging 52
Article 124 Hitting from Behind 52
Article 125 Cross Checking 53
Article 126 High Broom 53
Article 127 Boarding 54
Article 128 Intimidating an Opponent 54
Article 129 Roughing 54
Article 130 Fighting 55
Article 131 Head Shot 56
Article 132 Spearing / Butt-ending 56
Article 133 Attempting to Injure or Injuring Deliberately 56
Article 134 Refusal to Comply 56
Article 135 Threatening an Official 57
Article 136 Molesting the Official 57
Article 137 Abuse Towards Employees and Directors 57
Article 138 Threatening Outside of the Game 57
Article 139 Aggressing Outside of the Game 57
Article 140 Abuse Towards Officials & Officers Outside of The Game . 57
Article 141 Suspension of Support Staff 58

APPENDIX A Policies and Procedures 59
APPENDIX B First Aid Kit 60
APPENDIX C Double or Multiple Tie Breaking Systems 61
APPENDIX D Cross Over Games - Tie Breakers 63

APPENDIX E Examples of the Broomball Tie Breaking System 64
APPENDIX F Signals 68
APPENDIX G Broomball Ice Markings..... 76

CHAPTER ONE
THE RINK

Article 1 THE RINK

The rink shall include a viewing area and more particularly an ice surface, team benches, penalty benches, dressing rooms, signal and timing devices, lighting, complete hygienic installations and a first aid room.

Article 2 THE ICE SURFACE

The game of BROOMBALL is played on an ice surface. This surface must be shiny and free from snow particles. It must be protected from snowfall accumulation during play. The ice surface must be uniformly redone, at least once every six consecutive hours of play. If a wet film covers the ice surface, play must be interrupted at the end of the game, and the surface must be redone before the beginning of the next game or practice. A period of a least 5 minutes must be allowed before walking on the ice surface after all work required to redo the ice surface is finished.

Article 3 DIMENSIONS OF THE ICE SURFACE

a) As nearly as possible, the dimensions of the ice surface shall be 60 metres in length by 25 metres in width. The corners shall form an arc whose radius shall be as near as possible to 8.5 metres.

b) The ice surface shall be enclosed by a fence or wall, known as the BOARDS, which may be constructed of wood, plastic or any other material approved by the Federation. Measured from the surface of the ice, the boards shall be at least 1 metre in height, while not exceeding 1.2 metres in height. The inner surface of these boards shall be, if possible, painted white and shall be free from any object or obstruction that may cause injury to the players.

NOTE: Measurements in feet and inches are:

a) 60 metres = 196 ft. 10 in.
   25 metres = 82 ft.
   8.5 metres = 27 ft. 11 in.

b) 1 metre = 3 ft. 3 in.
   1.2 metres = 3 ft. 11 in.
   (Metric conversion based on: 1 in. = 2.54 cm)

Article 4 DIVISION OF THE ICE SURFACE

a) 3 metres from each end of the ice surface, a red line shall be painted on the ice, 5 centimetres in width, parallel to the end boards and continuing onto the side boards. This line extending across the ice surface shall be called the GOAL LINE. On ice surfaces exceeding 60 metres in length, the goal line may be drawn 4.5 metres from the end boards of the ice surface.

b) A red line of 30 centimetres in width shall be drawn at the centre of the ice surface, parallel to the end boards and continuing to the top of the boards. This shall be called the CENTRE RED LINE.

c) This centre line shall divide the playing surface into two (2) territories. The part of the ice surface where the goal is situated shall be called the DEFENSIVE TERRITORY of the team defending this goal; the half furthest from the defended goal shall be called the OFFENSIVE TERRITORY

d) On all ice surfaces of 60 metres or more in length, 2 blue lines shall be painted on the ice, 30 centimetres in width, parallel to the goal line, across the width of the ice surface and continuing to the top of each of the side boards. On ice surfaces of less than 60 metres in length, these blue lines shall divide the ice surface between the goal lines into 3 equal parts.

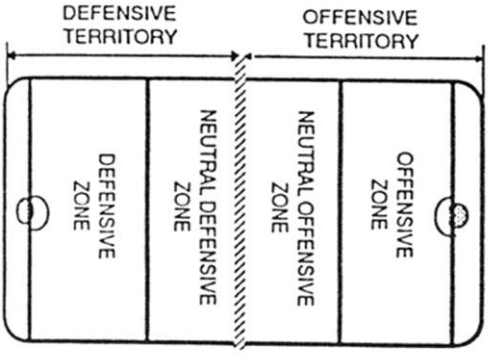

e) The blue line in the defensive territory divides this territory into 2 zones. From the end boards to the blue line, this area shall be called the DEFENSIVE ZONE; from the blue line to the red central line, the area shall be called the NEUTRAL DEFENSIVE ZONE.

f) The blue line in the offensive territory divides this territory into 2 zones. From the end boards to the blue line, the area shall be called the OFFENSIVE ZONE; from the blue line to the red central line the area shall be called the NEUTRAL OFFENSIVE ZONE.

g) The red centre line shall be considered as being part of the zone where play is occurring. The blue line shall be considered as being part of the zone where the play is occurring.

NOTE: Measurements in feet and inches are:
a) 3 metres = 9 ft. 10 in.
4.5 metres = 14 ft. 9 in.
60 metres = 196 ft. 10 in.
b) 30 centimetres = 12 in.
c) 60 metres = 196 ft. 10 in.
30 centimetres = 12 in.

Article 5 CENTRE ICE SPOT AND CIRCLE

A circular blue spot of 30 centimetres in diameters shall be painted in the exact centre of the ice surface. 4.5 metres from this spot shall be painted, also in blue, a circular line of 5 centimetres in width.

NOTE: Measurements in feet and inches are:
30 centimetres = 12 in.
5 centimetres = 2 in.
4.5 metres = 14 ft 9 in.

Article 6 NEUTRAL FACE-OFF SPOT

A circular spot of 60 centimetres in diameter shall be painted on the ice between the red centre line and the blue line, at a distance of 1.5 metres from the latter and at equal distance from the side boards.

NOTE: Measurements in feet and inches are:
60 centimetres = 24 in.
1.5 metres = 4 ft. 11 in.

Article 7 FACE-OFF SPOTS IN AND CIRCLES THE END ZONES

a) On both sides of the goals, in both end zones, red face-off spots of 60 centimetres in diameter shall be painted on the ice surface.

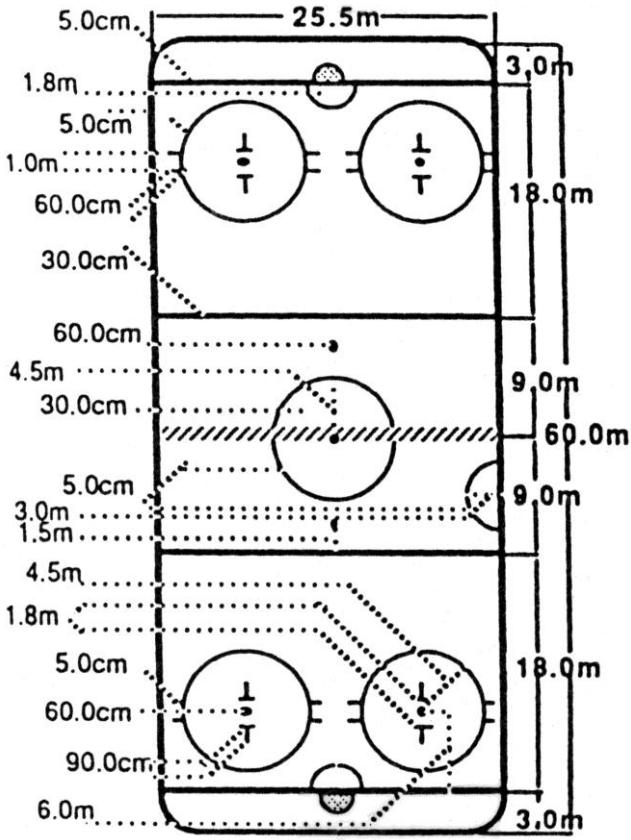

Circular red lines of 5 centimetres in width shall be painted on the ice at a radius of 4.5 metres from these face-off spots. 5.5 and 6.5 metres from the goal line, two (2) parallel lines of 5 centimetres in width and 60 centimetres in length shall be drawn from the outer edge of each face-off circle, parallel to the goal lines. In the end zones, on each side of the face-off spot, and separated from each other by a distance of 1.8 metres, two (2) red lines of 7.5 centimetres in width and 90 centimetres in length shall be drawn parallel to the goal lines. From the centre of each of these lines, and perpendicular to them, another line of 7.5 centimetres in width and 90 centimetres in length shall be drawn. (This should result in 2 drawings in the form of a " T " on either side of the face-off spots.)

b) The placement of the face-off spots shall be determined as follows: two (2) spots shall be marked at a distance of 6.6 metres on either side of an imaginary line extending from the centre of one goal to another, along a secondary imaginary line extending across the width of the ice at a distance of 6 metres from the goal line, parallel to which it runs. Each of these points shall be the centre of the face-off spots and circles. For ice surfaces of less than 22.5 metres in width, the face-off circles shall be reduced so as to not overlap each other. A minimum distance of 60 centimetres shall always be kept between the outer edge of the circle and the side board.

NOTE: Measurements in feet and inches are:

a)	60 centimetres = 24 in.	6.5 metres = 21 ft. 4 in.
	5 centimetres = 2 in.	1.8 metres = 5 ft. 11 in.
	4.5 metres = 14 ft. 9 in.	7.5 centimetres = 3 in.
	5.5 metres = 18 ft.	90 centimetres = 35 in
b)	6.6 metres = 21 ft. 8 in.	22.5 metres = 73 ft. 10 in.
	6 metres = 19 ft. 8 in.	60 centimetres = 24 in.

Article 8 THE GOAL POSTS AND NETS

a) Regulation goal post and nets, of approved design and materials, shall be installed at the centre of the goal line, between the side boards and in a manner that shall allow them to be moved during play.

b) The goal - Construction and Dimensions:
It is recommended that the goal posts be 6.35 centimetres in diameter (outside measure) and 1.5 metres in height, measured from the ice surface; the distance between posts shall be 2.1 metres (inside measure). A cross bar of identical materials shall link them together by the top, and be solidly fixed in place.

c) Every goal shall be equipped with a double net. The outer net shall be drawn in such a manner that it will not hold the ball. The inner net shall be loose enough to cushion the ball. It should be installed at the centre of the goal frame.

d) The goal posts, cross bars and exterior required to support the nets shall be entirely painted in red.

e) The goal frame shall be attached in such a manner as to move under the impact of a player colliding with it.

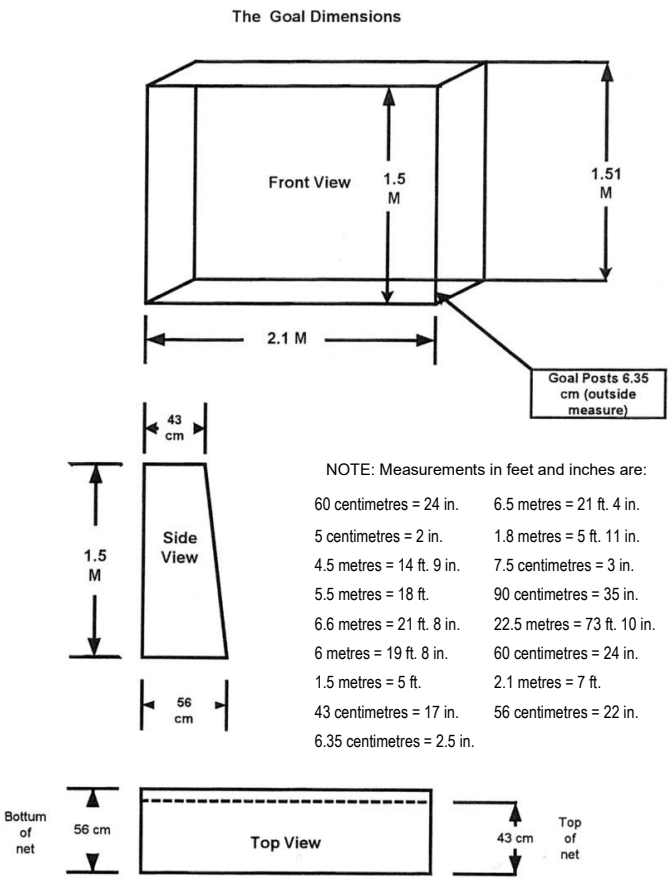

f) Referees shall check the goal and nets before the start of each period.

Article 9 THE GOAL CREASE

a) In front of each goal, a red line of 5 centimetres in width shall mark the goal crease.

b) A semi-circular red line shall be painted on the ice at a radius of 1.8 metres from a point situated on this goal crease line, exactly midway between goal posts. This semi-circular area, including the red line, shall be called the GOALTENDER'S CREASE.

c) It should be understood that the area covered by the goal crease on the ice shall extend to the height of the goal post.

NOTE: Measurements in feet and inches are:
75 centimetres = 2 ft. 6 in.
2.1 metres = 7 ft.
1.8 metres = 6 ft.

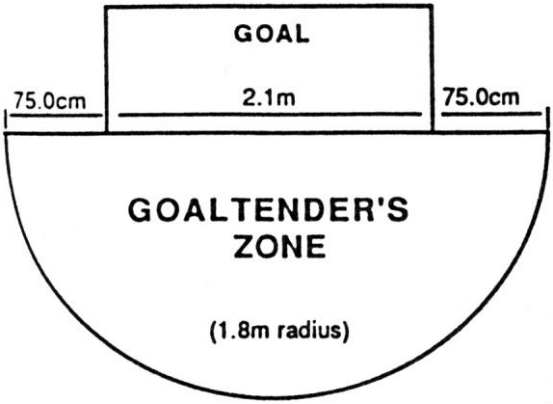

Article 10 THE TEAM BENCH

a) Each rink shall provide seats or a bench, called the TEAM BENCH, for each team. Each team bench shall be able to accommodate at least 20 persons IN A SINGLE ROW and shall be situated immediately along the ice surface in the neutral zone, as close as possible to the centre of the ice, and in the vicinity of the dressing rooms.

b) Only players in uniform and a maximum of 4 persons in charge may be on the bench during the game.

c) The home team shall have the privilege of choosing its own team bench.

d) The home team must choose the net at the opposite end of their team bench.

Article 11 THE PENALTY BENCH

Each rink shall provide a seat or a bench, called the PENALTY BENCH, for the use of penalized players and shall be able to accommodate 8 players, the penalty timekeeper, the game timekeeper and the official scorer. These seats or bench shall be located at substantial distance from the team seats or benches.

Article 12 THE DOORS

a) The doors shall open from the inside towards the inside of the box and shall be secured with a functional lock.

b) The doors giving access to the ice surface shall be kept closed during play.

Article 13 THE OFFICIAL'S CREASE

A semi-circular red line 5 centimetres in width shall be painted on the ice, at a radius of 3 metres from a point situated immediately in front of the penalty timekeeper's seat. This area shall be known as the OFFICIAL'S CREASE. Only the penalized player shall be allowed to cross this area, to take their place on the penalty bench.

NOTE: Measurement in feet and inches are:
5 centimetres = 2 in.
3 metres = 9 ft 10 in.

Article 14 TIMING DEVICES

a) Each rink should be provided with a buzzer or other suitable sound device to be used by the game timekeeper.

b) Each rink should be provided with an electric clock, allowing spectators, players and game officials to be informed of the TIME throughout the game. If the clock should have many faces, the one facing the game timekeeper shall be considered the OFFICIAL TIME.

c) The Corporation recommends the installation, whenever possible, of an electric buzzer or bell, and a well synchronized system with a green light and an electric clock, to ensure that the officials clearly see and hear the end of period or end of game signal. The beginning of the sound should have priority over the clock to indicate the end of the period. A light should also be provided to indicate the scoring of a goal.

d) In the event that the rink is not equipped with a permanent clock, a stopwatch or portable clock should be used.

Article 15 THE DRESSING ROOMS

a) Each rink shall provide suitable dressing rooms, with sanitary toilets and showers for the team's use.

b) For opposing teams, the managers shall plan on obtaining dressing rooms as far as possible from each other.

c) A separate dressing room, also equipped with sanitary toilets and showers, shall be provided for the use of the officials.

Article 16 ICE SURFACE LIGHTING

Sufficient lighting shall be provided for the players and spectators to be able to easily follow the game at all times.

Article 17 INSTALLATIONS

Installation used for activities must at all times conform to the description formulated in the present section.

Article 18 FIRST AID

a) A first aid room shall at all times be made available and be equipped for the primary treatment of injuries. This room shall be provided with the necessary services (lighting, heating).

b) During tournaments and championships, a first aid medical service must be available on site.

c) During tournaments and championships, a hospital must be informed, and ready to receive emergency cases.

d) A first aid kit shall be available at all times.

e) Each team should be sure to have among its personnel or players at least one person able to provide first aid. The trainer should bear a clearly visible red cross on the front of his coat, jacket or sweater.

Article 19 NAMES AND TELEPHONE NUMBERS

The organizer and the person in charge of the sport centre shall have an emergency phone number list. This list shall include the following numbers:

a) fire department
b) police department
c) ambulance service
d) hospital

This list shall be posted near an easily accessible telephone.

Article 20 EMERGENCY VEHICLES

The rink must be accessible to an ambulance.

Article 21 HOSPITAL

A hospital or medical centre must be in close proximity to the rink.

Article 22 PENALTY TO THE ORGANIZER

Any organizer who does not respect the disposition of the present regulation that concern him/her is liable to lose all privileges, surrendering the organization of any other sanctioned competition for the duration of the entire season following.

CHAPTER TWO
EQUIPMENT

The CBF must approve all new equipment that will enhance the performance of a player to ensure it is safe and meets all safety standards (i.e., Brooms, shoes but not limited to other items). The CBF must have a minimum of 60 days to research and approve new items.

ARTICLE 23 THE BROOM

a) The broom shall consist of a wooden, aluminium, carbon, composite or graphite handle (with a maximum circumference of 10 cm) that is commercially produced for Broomball and recognized by the Canadian Broomball Federation. The shaft and the head must be made by the same manufacturer and must match as commercially produced.

b) The distance from the tip of the broom to the end of the handle shall not exceed 1.35 metres.

c) The head of the broom shall measure between 18 and 22 centimetres in height, measured from the handle to the tip.

d) The head of the broom shall measure between 10 and 15 centimetres in width.

e) The base of the broom shall have a minimum width of 6.5 centimetres.

f) The head of the broom may be made moulded rubber, or of straw covered with rubber, or may be wound in tape.

g) The minimum broom length shall be determined by measuring from the ice surface to the player's wrist, as s/he stands with his/her arms resting at his/her sides.

NOTE: The official shall remove any broom considered dangerous.

h) TAPE ON THE BROOM

NOTE: Taping the broom is permissible provided that:
1. No plastic or elastic tape is used.
2. The measurement is still within the guidelines (Except for the knob on the end of the shaft which must be less than 15 cm. maximum in circumference; 5 cm. in length).

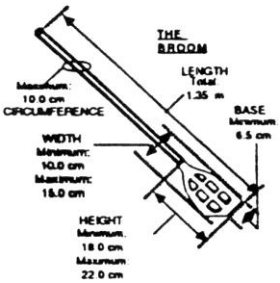

NOTE: Measurements in feet and inches are:
a) 10 centimetres = 4 in.
b) 1.35 metres = 4 ft. 5 in.
c) 18 centimetres = 7in.
22 centimetres = 9 in.
d) 10 centimetres = 4in.
15 centimetres = 6in.
e) 6.5 centimetres = 2.5 in.

Article 24 THE BALL

The ball shall be spherical, composed of a supple rubber envelope or similar matter. The ball shall be of a uniform colour, orange, blue or black, with a circumference of between 44 and 48 centimetres. It shall weigh between 225 and 275 grams.

Any frozen or deformed ball shall be refused for play by the official.

NOTE: Measurements in feet and inches are:

44 centimetres = 17 in.	48 centimetres = 19 in.
225 grams = 8 ounces	275 grams = 10 ounces

Article 25 BROOMBALL SHOES

a) The broomball shoes shall be designed for the wearers, and the other player's safety. They shall be worn by all players, coaches, trainer or other technical personnel. Without authorization from the officials, no one shall walk on the ice surface without broomball shoes.
SANCTION: Minor penalty

b) The appropriate shoes must be worn, according to whether the activity takes place indoors or outdoors.

Article 26 PANTS

a) The pants have been designed to ensure the safety of the wearer as well as the other players.

b) The players of the same team must wear pants of the same base colour.

c) The pants are considered part of the uniform.

Article 27 SWEATER

a) The sweater must have been designed for broomball.

b) All players shall have attached to their sweater backs a legible whole number (no fraction) from 0 to 99, of at least 18 centimetres in height and 10 centimetres in width, except for the number 1 which shall have a minimum width of 2 centimetres. Numbers can include "00".

c) All players of the same team shall wear different numbers on their sweaters. SANCTION: Minor Penalty and removal of the illegal equipment until modified or replaced.

d) At all times during competition, all players of the same team shall wear sweaters of identical style and colour.

e) The sweater is considered to be a part of the uniform.

f) It is the responsibility of the HOME team to change its sweaters if the colours of the competing team's conflict.

Article 28 A PLAYER'S PROTECTIVE EQUIPMENT

Generalities: All protective equipment has but one purpose: to protect the player not to advantage him/her.

a) All protective equipment, except gloves, helmet and ankle pads, shall be worn and held in place under the uniform.

b) The approved helmet, as commercially purchased (CSA approved), leg pads, elbow pads and broomball shoes are required wear for all categories.

c) Helmets must be securely fastened at all times with no more than two finger spacing between the strap and the chin of the player in question. If a helmet comes off during play, the player must replace it immediately and securely fasten the chin strap before re-commencing play or go directly to the player's bench without participating in the play (see Article 29 b).

d) CSA approved protective helmets must be worn by all players. Helmets with CSA approved full face masks (wire face masks or complete face shields) are mandatory for all minor aged players. Half visor or full-face masks are mandatory for all other divisions.

e) Hand protection is mandatory. Gloves must be padded. Padding must be equal to or greater than the padding contained in commercially produced broomball gloves and contain no external hard plastic. The hockey glove shall be permitted.

f) The chest pad shall be permitted for men, and the breast protector for women.

g) Athletic supports are recommended for all male athletes.

h) Shoulder pads are allowed as optional protective wear. The shoulder pads must be a soft nature with no hard covering and must be worn in place under the jersey.

NOTE: Officials should direct any players with any securing devices (tape, straps, etc.) outside of the uniform (with the exception of the waist as a belt) to remove such devices or the player shall be assessed a MINOR PENALTY and stopped from further participation in the game.

Article 29 GOALTENDER'S EQUIPMENT

Generalities: All protective equipment has but one purpose: to protect the player, and not to advantage him/her.

a) The goaltender may only wear one glove with protective padding on the back of the glove. This glove shall be a CSA approved blocker that is similar to the blocker used by a hockey goaltender. This glove shall not measure more than 21.6 centimetre (8 1/2 in.) in width, and 41.9 centimetres (16 1/2 in.) in length.

b) A (CSA approved) protective helmet with an attached (CSA approved) protective mask must be worn by the goaltender at all times. The high-tech goaltender masks (CSA approved) are also legal. When a goaltender loses his/her helmet and/or facial protector, play shall be stopped immediately.

c) The shoulder pads and body protector shall take on the form of the body and shall be completely covered by the sweater. The above-mentioned equipment must not be made of metal.

d) Leg guards are permitted but they must be of current form, as manufactured, without felt or other additional material that may widen or lengthen them, and must be worn under the pants.

e) The goalie must also wear all other pieces of protective equipment required for players.

(Metric conversion based on: 1 inch = 2.54 cm.)

CHAPTER THREE
THE TEAM

Article 30 TEAM CAPTAIN OR ASSISTANT-CAPTAIN

a) They are the official representatives of their team.

b) Each team may designate 1 captain and no more than 2 assistant-captains. The captain shall wear on the front of his/her sweater and in plain sight the letter "C" and similarly, the assistant-captains the letter "A". Without this distinctive mark, appropriate privileges shall not be granted.

c) The captain or assistant-captain, but not both at the same time, may address an official to ask for rule interpretations or information essential to the playing of the game; they may do it, when necessary, with "COURTESY", during normal stoppages of play.

d) No goaltender, substitute goaltender, player/coach or player/manager has the right to act as captain or assistant-captain.

Article 31 THE COACH

a) His/her function is to see to the smooth operation of the team before, during and after the game.

b) Before the start of the game, the coach shall supply the official scorer with the names and numbers of all players present, as well as the names and numbers of the captain, assistant-captain and goaltender. This list shall also contain the names of the team representative and shall be signed by the coach.

c) During the game, when his/her team receives a minor team penalty, or while substituting players on the penalty bench, the coach must promptly designate, via his/her captain or assistant-captain which player, present on the ice at the moment of the infraction, will sit out this penalty.

d) S/he shall exert his/her authority in order to keep full control of their players.

e) S/he shall dissuade all players from resorting to violence or illegal tactics.

Article 32 THE TRAINER

a) Each team may designate 1 trainer.

b) S/he is officially responsible for the team in all matters pertaining to treatment of injuries.

c) It is the player's responsibility to report to his/her trainer any injuries incurred in training or competition.

d) To receive accreditation from the Federation, any trainer must first hold a qualified first aid certificate.

e) S/he must at all times have available a first aid kit conforming to the description in Appendix B.

f) S/he must be aware of the availability of medical personnel in the sport centre.

CHAPTER FOUR
THE OFFICIALS

Article 33 THE OFFICIALS

Generality: To act as an official, a person must hold a qualification certificate, testifying to his/her level, as recognized by the Federation.

a) The official is a representative of the Federation.

b) The officials represent the Federation on ice, during a competition or competitive activity. It is their duty to enforce all Corporation rules. They receive money for their work as representatives and not as volunteers. This is negotiable between the Corporation, the official and the beneficiary of the service.

c) As an official, it is strictly forbidden for him/her to have other officials under his/her orders. However, the scorer, penalty timekeeper, game timekeeper and goal judges shall follow his/her directives, just as any other person involved in the game.

d) S/he shall verify installations and equipment prior to the start of the games. S/he shall deny access to the playing area to any player who has not conformed to the dress rule, or who dresses in too poor of a condition.

e) S/he shall always act to penalize a player who, following an illegal action, has placed an opponent in a disadvantageous position. S/he shall apply the penalties as stipulated.

f) S/he shall see to it that the game progress as smoothly as possible, creating as little interference as possible.

Article 34 CODE OF CONDUCT

a) Officials shall not enter into discussions with team representatives or players during a game or immediately prior to or after a game.

b) Officials shall wear the approved Canadian Broomball Federation Official's uniform. This uniform consists of black pants, a CSA approved black helmet with an approved half-facial protection (wire or shield) as well as the official's black and white sweater.

c) The officials shall wear a "RED WRIST" band so as to inform players of different delayed whistles.

d) Officiating Broomball requires 2 officials vested with the same powers on the ice.

e) The officials shall render the final decision on contested points, after having consulted each other, as well as the goal judge, if necessary.

f) The officials shall indicate to the scorer the infractions incurred and the penalties imposed, as well as the goal scorer and assists, if necessary.

g) Immediately after the game, the officials shall obtain the game report from the scorer, verify it, sign it and return it to the scorer.

Article 35 SUBSTITUTION OF AN OFFICIAL

a) If, at the last minute because of sickness or accident, an assigned official is unable to finish a game, the other official has the power to name a replacement if s/he feels it is necessary, or if s/he is requested to do so by the manager or coach of one of the teams involved.

b) If, because of sickness or some other unfortunate event, the assigned officials are unable to present themselves at the game site, the managers or coaches of the teams involved shall agree on a choice of officials. Otherwise, they shall name a player from each team to act as officials.

c) If the regularly assigned officials arrive during the course of the game, they shall immediately replace the temporary officials.

Article 36 INCIDENT REPORT

When an incident occurs before, during or after the game, an official, officer or employee, as the case may be, shall submit an official report to the league, regional development club, Federation or Corporation executive, as appropriate.

Article 37 ACCIDENT REPORT

When an accident occurs before, during or after the game, an official, officer or employee, as the case may be, shall submit a report to the Corporation.

Article 38 PARTICIPATING WHILE UNDER THE INFLUENCE

Any player, coach or team representative judged to be under the influence of alcohol or drugs shall be sent to the dressing room.
Sanction: Game miscoduct penalty

Article 39 THE SCORER

Definition: S/he is the technician of the competition.

a) The scorer is under the authority of the two officials.

b) The scorers' tasks include producing an official game report with an exact account of the goals scored, the players who have scored and, where appropriate, the players who should be awarded assists. S/he shall also register all penalties imposed by the officials, indicating the names and numbers of the penalized players, the duration of each penalty and time at which the penalty was imposed.

c) Prior to the beginning of the game, the scorer shall obtain from the coaches the complete lineup for each team present, which s/he shall have verified and signed by them. The captain, assistant-captain and goaltender for each team must be identified on the game report.

d) The scorer shall submit the completed line-ups for the teams present to the officials before the beginning of the game and shall indicate to them any situation that is not in accordance with the rules.

e) The scorer shall advise the officials when the same player receives two major penalties in the same game.

f) If a loudspeaker system is used, the scorer shall announce, or have someone announce, the name of each player scoring a goal, and the name of each player awarded an assist, immediately after each goal is scored.

g) At the end of the game, the scorer shall sign the official game report, have it signed by each of the officials, and send it to the concerned authority.

Article 40 THE GAME TIMEKEEPER

Definition: S/he is a technician of the competition.

a) The game timekeeper is under the authority of the two officials.

b) The game timekeeper shall take notice of the game start and finish times, as well as the time of play during the game.

c) The game timekeeper shall warn the officials when it is time to start the game, the second period as well as any overtime periods. S/he shall also signal with a siren or whistle, the end of each regular and overtime period.

d) The game timekeeper shall warn, or have someone give warning, when there remains only one minute of play in each regular and overtime period.

In case of disagreement concerning the time, the matter shall be referred to the officials for adjustment and their decision shall be final.

Article 41 THE PENALTY TIMEKEEPER

Definition: S/he is a technician of the competition.

a) The penalty timekeeper is under the authority of the two officials.

b) The penalty timekeeper shall record the time remaining in the penalty and, upon request, s/he shall indicate to the penalized player how much time remains in the penalty.

c) If a player leaves the penalty bench before his/her time expires, the penalty timekeeper takes note of the exact time and signals the officials, who stop the play as soon as possible.
Reference: Article 104 (a & b)

d) In case of fighting, the penalty timekeeper shall have the power to take note of the player's numbers and to aid the officials in the imposition of penalties. The penalty timekeeper must especially watch for players who leave the player's bench during a fight and notify the officials about the situation.

e) Where loudspeakers are used, the penalty timekeeper shall announce, or have someone announce, the name of any penalized player, the nature of the offence, the penalty assessed and the time at which it was awarded.

Article 42 GOAL JUDGES

Definition: S/he is a technician of the competition.

The goal judges are under the authority of the two officials.

a) The goal judges shall have the task of determining if the ball completely crosses the red goal line to penetrate the goal. In the affirmative, they shall turn on the red light provided for this purpose.

b) It is not the goal judge's task to determine the goal's validity, but to signal that the ball has penetrated the goal, independently of the manner and circumstances.

c) It is the sole responsibility of the officials to determine if a goal is valid or not.

CHAPTER FIVE
THE GAME

INTRODUCTION

The sport of Broomball is a team discipline where physical contact is regulated. The object of the sport is to score points on an ice surface by hitting a ball into an opponent's net with a broom. During play, each team is allowed a maximum of six players and a minimum of four players on the ice in regulation time and a maximum of four players and a minimum of three players on the ice (including the goaltender) in overtime. During Mixed play, an equal number of male and female players are to be on the ice at all times. Three males and three females during regulation time. During overtime, there must be two males and two females on the ice at all times (including the goaltender). A penalized player shall be considered part of the on-ice team.

Article 43 DURATION OF THE GAME AND PERIODS

a) The duration of each competitive game shall be at least 36 minutes (stop time) for all categories. This time shall be divided into at least two periods. This does not include the overtime that may be added to the end of the regular game, when overtime has been foreseen in the event of a tie in the score. The minimum break of two minutes shall be obligatory between periods.

b) After a difference of five (5) goals, the time clock will run at straight time. The game will automatically end when there is a difference of eight (8) goals.

c) Teams shall change ends of the rink after each regular period. Teams shall not change ends in overtime. They will keep the same end for the duration of overtime.

d) A time out of 60 seconds per team per game may be requested by one of the captains or assistant-captains during a pause in play.

Article 44 NAME LIST

a) During the course of an official game, names may be added to the list, up to 20 players and four persons in charge.

b) Once the game has begun, no name may be removed or substituted from the list.

Article 45 TEAM SHORT OF PLAYERS

a) If a team does not have the required number of players to complete it's initial line-up, that is to say one goaltender and five players, the officials shall apply Article 93.
Reference: Game Awarded By Decision

b) A minimum of 11 registered players must be present at the beginning of the event, after this the team must have 6 players in order to be recognized as a team in a competitive event at the Championship.

c) If, following injuries, abandonment or penalties, a team no longer has the required number of players to continue the game, it shall automatically lose the match, even if it is ahead in the scoring at the time of the incident. Apply Article 93.

Article 46 TOO MANY PLAYERS

A team may file a protest if more than 20 players dress for the opposing team.

Article 47 INITIAL LINE-UP

a) At the beginning of each period, the visiting team coach shall be the first to designate his/her players to take place on the ice, including a goaltender identified as such.

b) At any time, at the officials' directive, both teams shall designate the players to take place on the ice for the face-off.

Article 48 BEGINNING OF THE GAME AND PERIODS

The game shall start at the scheduled time, except in the case of delay with the preceding game, in which case the game shall start immediately following this preceding game.

Article 49 OVERTIME PERIOD

Generalities:

a) If the score is tied at the end of regulation time, the overtime, if applicable, shall begin with a centre ice face-off.

b) In overtime, the teams shall play three against three, plus goaltenders. Goaltenders must remain in their defensive zone at all times**.** Exception: **Coaches may pull their goaltenders if they choose and replace them with an additional player.**

c) Mixed - in overtime, there are to be two males and two females on the ice at all times.

d) During Round Robin games, the duration of the overtime period shall be **five (5) minutes** (stop time). The game shall end as soon as a goal is scored. **If the game is tied at the end of five (5) minutes, the game shall end in a tie.**

In Playoff games, the duration of each overtime period shall be eighteen (18) minutes (stop time). The game shall end as soon as a goal is scored.

e) For a goal to be scored at any time in the overtime period, the ball does not have to cross the centre line before the ball is shot into the net.

f) If two players from the same team earn penalties at the same time, the Referee will assign the first penalty and the other penalty shall be a delayed penalty.

g) If a minor or major penalty is given simultaneously to both teams but one player receives four (4) minutes and the other only receives two (2) minutes, the teams shall play three on two plus goaltenders (the advantage will be effective immediately). The team with the four (4) minute penalty must place a player from the ice surface into the penalty box to serve the extra two (2) minute penalty. This player shall return to the ice when the two (2) minute penalty expires if no goal is scored.

h) If a minor or major is given simultaneously to both teams, the penalized players shall be replaced on the ice. The penalized players shall take their place on the penalty bench. In this case, they shall not return to the ice or players' bench

until the first stoppage of play after their penalties have expired. The teams will play 3 against 3 plus goaltenders.

i) If one of the teams should refuse to play the required overtime period or periods, the remaining team shall be declared the winner.

j) In the Mixed category, if the team in numerical disadvantage is penalized with a second (or additional) penalty (which will be delayed), this team sends a player on the playing surface, of the same sex as the second to last player to have been penalized, in order to remain at two (2) against three (3). When the penalty ends while another is delayed, the player who has finished his/her penalty must wait for a stoppage of play before leaving the penalty bench.

Article 50 PROTEST

Any notice of protest must be given to the official, by the captain or assistant-captain, at the time of the incident, before play resumes. At this time the official must record on the back of the score sheet the incidents leading to the protest (time and rule). The person in charge must send a copy of the protest, by registered mail, to the opposing team, to the league executive and to the regional development club, as well as to the provincial Federation or the Canadian Federation, as appropriate. A deposit of $100 must be made to the Canadian Federation within the following 24 hours (except on Sunday), for any kind of protest. In the case of sanctioned tournaments, provincial and national championships, the same deposit must be made to the person responsible for the competition, within the 60 minutes following the completion of the game, along with the duly completed protest form. The deposit shall only be reimbursed in the case of a valid protest. The protest form must be signed by the coaches, or team representatives, as identified on the competition entry form.

The official who has officiated a game under protest must present a report of the incident to the person responsible for the competition within 60 minutes following the end of the game. The protest committee's decision shall be final and without appeal. A protest on a player's eligibility can, on the other hand, be filed at any time during the game.

A protest cannot be filed against the judgement of the official. However, the judgement of an official cannot deny a team's rights.

a) 1st Specification - A protest aims at competition rules only.

b) 2nd Specification - No protest may be filed with regards to Article 1 to 29, inclusively.

c) 3rd Specification - Article 93 may at no time be invoked to forbid filing of a protest. The final result of the game does not affect a protest.

FORMALITIES

a) Should the plaintiff win the protest, then the game is replayed from the time of the incident that caused the protest, including all results prior to that moment.

b) Should the protest be rejected, the final result of the game remains the same.
c) All measures related to the protest committee's decision become executory.

e) In case of a valid protest, the reimbursement of the deposit shall be made immediately following the decision.

f) All major, misconduct, game misconduct and Match penalties assessed after the time of the incident that caused the protest shall be honoured whether the protest is upheld or not.

Article 51 RESULT OF THE OFFICIAL GAME

a) The team scoring the greater number of goals during the game shall be declared the winner, and shall be awarded two points in the standings.

b) **If** overtime is **required**, the team scoring the first goal shall be declared the winner and shall be awarded two points in the standings

In a game in which both teams **remain** tied **at the end of overtime**, one point shall be awarded to each team.

CHAPTER SIX
PLAY IN PROGRESS

Article 52 GOALS

A) A goal shall be legal in the following cases:

1) When an attacking player directs or deflects the ball into the goal with his broom.

2) If the ball deflects into the goal after hitting any part of the body or shoes of an attacking player.

3) If the ball is lodged in the goal, in any manner, by a member of the defensive team (no assist shall be awarded).

4) If the ball penetrates the goal while an attacking player is in the goaltender's crease as a result of being dragged there by any defending player.

B) A goal shall be refused in the following cases:

1) The ball is hit, thrown or directed deliberately into the goal by an attacking player by any means other than the broom.

2) If the ball is hit by an attacking player with his/her broom higher than his/her normal shoulder level.

3) When an attacking player, or any part of him/her, penetrates the goaltenders' crease before the ball.

4) If an attacking player hits the ball with his foot, hand or any other part of his body, and the ball bounces into the goal off of a defending player.

5) If the goal was scored in a manner not foreseen in the rules.

6) If the ball bounces directly into the goal off an official.

Article 53 ASSISTS

Definition: The action of legally directing the ball to a team-mate who goes on to score a goal.

Generality: An assist shall be awarded to the attacking players who helped the scorer.

Article 54 SCORING CLASSIFICATION

a) No more than two assists shall be awarded per goal.

b) Each goal and each assist shall count as 1 point in the scoring classification.

Article 55 SUBSTITUTION

During the game players from the bench may replace players from the ice. This may be done during stoppages in play or on the go. Goaltenders may also be substituted for an extra attacker.

A) PLAYERS SUBSTITUTION

a) Substitutions during stoppage of play:
Rule: Substitutions are allowed during any stoppage of play, but must not DELAY the resumption of play.
Procedures: Any change of players must be initiated before the officials are in position to conduct the face-off.

1) The visiting team must be the first to make its changes, allowing the home team enough time to make their own changes.

2) All player substitutions must be made at a running pace.

b) Substitutions during play:
Rule: They are permitted at all times.
Procedures: The replaced player must leave the ice and take his/her place on his/her team bench without interfering with the game in progress. However, the player leaving the bench must wait until the player s/he is replacing has one (1) hand on the boards in front of the players' bench before hopping on the ice.
Specification: If, while changing players during play, the number of players going onto the ice is greater than the number of players leaving the ice, there shall be no penalty if the players resume their seats on the team bench without having interfered with the game in progress.

c) Substitutions upon leaving the penalty bench:
Rule: A player at the penalty bench may be replaced upon expiration of his penalty.
Procedures: He must go to his team bench VIA THE ICE SURFACE, for the change to take place.

B. GOALTENDER SUBSTITUTION/PRIVILEGE

Generalities: A goaltender substitution may be made at any time during a stoppage of play, in the allowed manner and as often as the team coach wishes.

a) Substitutions of goaltender by another goaltender;

1) The substitution of a goaltender by another goaltender may occur during any stoppage of play, by notifying the officials of the change.

2) No warm-up shots shall be allowed following a goaltender substitution, except if the substitution was made due to injury.

b) Goaltender substitution for an additional attacker;

1) A goaltender substitution for an additional attacker may be made at any time in the game, in the allowed manner and as often as the team coach wishes. Exception: Overtime (see Article 49 b).

c) Following a goaltender substitution, the replaced goaltender may become a player and vice-versa.

PRIVILEGE:

a) The goaltender has special privilege when s/he is inside or in contact with

his/her goaltender's crease. When s/he steps out of his/her crease, s/he is considered another player.

b) The goaltender may use pieces of equipment inherent to his/her function.

c) The goaltender may be substituted for on the penalty bench.

d) Only the goaltender, in contact with his/her goaltender's crease, may freeze and close his/her hand over the ball if there are opposing players near him/her.

e) If the ball freezes itself behind or on the net, it is considered to have been frozen by the goaltender, regardless of whether it was lodged there by the attacking or defending team.

Article 56 THE ACCEPTED PASS

a) Pass made legally with one's broom or foot.

b) Pass made with one's hand, intercepted and CONTROLLED by an opponent.

c) Hand pass made and received in the defensive zone only.

d) Hand pass made by the goaltender (while in the goal crease).
NOTE: Play shall be whistled down immediately if any player, including the goaltender throws the ball (overhand or underhand) in the direction of the attacking teams' zone. The face-off shall occur in the offending teams' defending zone. Article 99 Definition and Article 101 c) shall still be enforced.

Article 57 FACE-OFF

a) There is execution of a face-off after every goal and at the beginning of each period.

b) There is execution of a face-off after each stoppage of play (Exception: Penalty Shot)

c) The preparation of a face-off begins when the official designates the place of the face-off and assumes his position to drop the ball.

d) The execution of a face-off begins when the official drops the ball on the ice, between the brooms of the players facing-off, in such a manner that the ball does not bounce.

Article 58 POSITION OF THE PLAYERS FACING-OFF

a) At face-off circles, neutral or central point:

When a face-off occurs at one of the neutral or centre ice points, the players designated for the face-off shall DIRECTLY face adverse territory. They must leave between themselves, and particularly between their shoulders, a distance of approximately one broom length (1.35 metres). Also, no part of their bodies shall project above an imaginary upward extension of the face-off circle. (Metric conversion based on: 1 inch = 2.54 cm.)

b) The brooms of the players designated for the face-off shall be centred, facing the face-off circle, and in contact with the ice, and must in no way obstruct the face-off spot.

c) The feet of the players designated for the face-off shall be positioned such that one foot is on either side of an imaginary line passing through the centre of the face-off spot and perpendicular to the centre red line.

Article 59 POSITION OF THE OTHER PLAYERS AT THE FACE-OFF

a) Face-off points without a circle:
Except for the two players facing-off, no player shall be permitted within 4.5 metres of the face-off spot.
(Metric conversion based on: 1 inch = 2.54 cm.)

b) Face-off points with a circle:
When a face-off occurs in a centre or end ice circle, no player shall be permitted inside the circle except for the two players facing off. Furthermore, the players must remain behind the line around the face-off circle.

Article 60 FACE-OFF EXECUTION

a) Once the official responsible for the drop of the ball determines the players are in position, the official will blow the whistle and the ball will be dropped within 5 seconds.

b) The face-off shall be official, and the ball considered in play, only once it has come into contact with the ice surface.

c) Once the official has dropped the ball on the ice, the players facing-off may take possession of the ball with their broom. This must be done in a motion that pushes the ball forward on the ice or brings it toward the back or the sides (Never in an upwards broom motion).

d) When a violation of the face-off procedure occurs and the officials can determine the violator or violators, the centre(s) of the offending team(s) will be replaced for the drop of the ball. The player who causes the infraction shall not be allowed to take the face-off.

e) If one of the players facing-off fails to take up his position promptly once warned by the official, the official shall call a penalty for delaying the game.

Article 61 REGULATION DETERMINING FACE-OFF LOCATIONS

a) Following a stoppage of play, the face-off occurs in the territory of the player who caused the stoppage in play except for a delayed penalty. In such a case, the face-off will occur in the defensive zone of the last penalized player.

b) Following a goal, the face-off shall occur at the centre of the ice surface.

c) If a stoppage of play occurs as the result of the simultaneous action of two players, the face-off shall occur at the face-off spot in the zone where the stoppage occurred.

d) When a stoppage of play occurs for a reason not covered in the rules, the face-off shall occur at the face-off spot nearest to the place where the stoppage of play occurred.

Article 62 OFF-SIDE AT THE CENTRE RED LINE

Definition: The action of an attacking player preceding the ball into the offensive territory.

Generalities: The position of the shoes determines if a player precedes the ball into the offensive territory. A player is not off-side as long as one or the other shoes touches the outer edge of the stated line, the off-side not arising however until the ball has completely crossed the outer edge of the centre red line.

A) Automatically whistled off-side:

1) When a team-mate of the guilty player enters into the offensive territory with the ball.

2) When a team-mate of the guilty player takes possession of the ball in the offensive territory.

B) Delayed off-side:

1) When a member of the team in possession of the ball precedes the latter into the offensive territory and the ball is clearly intercepted by a player of the opposing team, carried or passed back over the centre red line, the delayed off-side is cancelled and play continues.

2) If the ball bounces off a defending player or his/her equipment, including his/her broom, thereby forcing an attacking player to precede the ball to the offensive territory, a delayed off-side shall occur if the team provoking the

off-side does not have control of the ball from the moment of the infraction until the ball leaves the territory.

3) In the case of a delayed off-side, if the player who is in possession of the ball causes a stoppage of play due to any other rule infringement, it is the latter infraction that shall be penalized.

4) If, on a delayed offside, the offending team immediately clears the offensive zone, the delayed offside will be cancelled and play will continue (using delayed offside guidelines).

5) If, on a delayed offside, the ball is shot by an attacking player and enters the opponents goal crease, play shall be stopped immediately.

C) Intentional off-side:

If, in the officials' opinion, a player of the offside team committed the offside intentionally. Should this occur, the impending face-off shall occur in the offending team's defensive zone.

D) When a pass is accepted directly offside from a player in the defensive zone, the impending face-off shall occur in the offending team's defensive zone.

Article 63 ICING

Definition: Icing is the action of sending the ball, from one's territory, beyond the adverse goal line, without any interference from the opponents.

a) Icing shall occur as soon as the ball crosses the red line.

b) Play shall continue:

1) If the icing results directly from a face-off.

2) If the ball touches the line or penetrates the goaltender's crease before crossing the goal line.

3) When the ball touches the goaltender or his/her equipment.

4) When the goaltender is outside of his/her crease at the moment the ball crosses the centre red line.

5) When the goaltender leaves his/her crease after the ball has crossed the centre red line.

6) If, in the official's opinion, a player from the team an icing has been committed against did not make a reasonable effort to gain control of the ball before it crosses the goal line.

7) In the case where the goaltender is replaced by an additional attacker who is not considered as a goaltender, points 3, 4 and 5 shall not be taken into account.

Article 64 HIDDEN BALL

a) In the event of a scuffle or a player falling accidentally on the ball, causing the ball to be hidden from the nearest official, the play shall be stopped immediately.

b) The goaltender, while making a save outside of his/her crease, causes the ball to become hidden from the nearest official, the play shall be stopped immediately.

Article 65 LEGAL HANDING OVER OF THE BROOM

Any handing over of the broom must be made from one hand to the other.

Article 66 DROPPED BROOM

a) A player who has dropped his/her broom may participate without a broom until the next stoppage of play, or s/he may get another one directly from the bench during play or from a team-mate on the ice.

b) Another player may not intentionally direct the broom towards the player who dropped it.

Article 67 REFUSING TO PLAY THE BALL

a) If a team refuses to play the ball when there is a delayed stoppage of play or penalty signalled by the official, play shall be stopped.

b) A player who leaves the ball in front of him for more than 3 seconds without playing it shall be considered to be refusing to play the ball; the play shall be stopped immediately.

Article 68 REFUSING TO PROGRESS WITH THE BALL

Rule: The player who is in possession of the ball in his own defensive territory must constantly be moving the ball towards the opposite territory, except if prevented from doing so by opposing team members. Any violation to this rule must be rapidly detected by the official and whistled.

Sanction: 1) First offence - a warning from the official
2) Second offence - Minor penalty, Delay of Game

a) The voluntary action of bringing the ball back into the defensive territory with the intent of killing time is forbidden at all times.

b) Barricading: The formation of a barricade (where the players position themselves in order to prevent goals from being scored against them) in front of the net by a team giving no sign of offensive motion.

Article 69 BALL UNPLAYABLE OR OFF THE ICE SURFACE

Rule: When the ball leaves the ice surface or touches any object that is not part of the playing surface and falls back on the ice, the official shall stop the play.

a) Faulty player: The last player to have touched the ball is considered to be the faulty player.

b) The goal frame is considered to be an integral part of the goaltender's equipment. If the ball hits the horizontal bar or the goal posts and leaves the ice surface, it is considered to have been hit by the goaltender.

Article 70 ILLEGAL BALL

a) At any moment during play, if a ball other than the one validly in play appears on the ice surface, the game shall not be stopped and play shall continue with the ball already in play until the play has been completed.

b) If a second ball interferes with the ball validly in play, the lead official shall stop the play.

Article 71 BALL TOUCHING AN OFFICIAL

Play shall not be stopped if the ball touches an official anywhere on the ice surface, except if this causes it to bounce directly into the goal.

Article 72 ILLEGAL BALL IN THE GOAL CREASE

Any ball hit or directed by hand, foot, high broom or body in the goal crease by a player of the attacking team shall cause an automatic stoppage in play.

Article 73 LEGAL CONTACT

a) Body Contact – a player making contact with an opponent while competing for the ball or for position is permitted. Excessive roughing while in this process is not tolerated.
Sanction: Minor or Major penalty dependent on the severity.

b) No Body Checking (Mixed, Masters and Senior Women's Non-Checking Division) – any player who, in the opinion of the Official, intentionally bodychecks, bumps, shoves or pushes any opposing player.
Sanction: Minor penalty or, at the discretion of the Official, a Major penalty and a Game Misconduct. If a player is injured, a Major penalty and a Game Misconduct shall be assessed.

When the offensive player is moving towards the defensive player, the defensive player may not hit the offensive player by going in the opposite direction of that player. The body contact must be as a result of the movement of the offensive player. There must be no action where the offensive player is pushed, checked or shoved into the boards. Where in the discretion of the Official, accidental contact has taken place, no penalty shall be assessed.

Article 74 BROOMBALL CONTACT HIGHER THAN THE SHOULDERS

Except for the goaltender in his/her crease attempting to make a save, it is forbidden to touch or hit the ball with one's broom higher than one's normal shoulder level.
Sanction: Minor penalty

Automatic stoppage of play IF:

1) The ball is recovered by the guilty player or a team-mate.

2) The ball goes into the opponent's goal crease.

Article 75 STOPPAGE OF PLAY BECAUSE OF INJURY

a) Injured players:

1) If a player is injured in such a manner that s/he can neither continue to play, nor return to his/her bench, play shall be stopped when his/her team has regained possession of the ball. If his/her team is in possession of the ball at the moment of the incident, play shall be stopped immediately, unless his/her team is in scoring position, in which case the official shall allow completion of the play.

2) If it is clear that a player is severely injured, the officials shall stop the play immediately.

3) If a penalized player is injured, s/he shall be allowed to go directly to the dressing room, without passing by the penalty bench, but a substitute shall be sent to the penalty bench in his/her place.

4) If a penalized or injured player returns to his/her team bench before his/her penalty has expired, s/he may not take part in the game before the penalty is over. S/he may however replace the player sitting out the

penalty for him at the penalty bench at the earliest stoppage of play.

5) When an injured player is the reason for the stoppage of play, the injured player must be replaced by a substitute player prior to the face-off.

b) Injured goaltender:

1) If a goaltender is injured, s/he is allowed two minutes to resume his/her position, otherwise s/he shall be replaced.

2) In case of substitutions because of an injured goaltender, a 1-minute warm-up shall be granted to the substitute goaltender.

3) If a goaltender has been injured in such a way that s/he is neither able to continue to play, nor to return to his/her team bench, play shall be stopped when his/her team has regained possession of the ball. If his/her team is in possession of the ball at the moment of the incident, play shall be stopped immediately, unless his/her team is in scoring position, in which case the official shall allow completion of the play.

4) If it is clear that a goaltender is severely injured, the officials shall stop the play immediately.

CHAPTER SEVEN
TYPES OF PENALTIES

Article 76 TYPES OF PENALTIES

Penalties are measured in effective playing time and are classified as follows:

a) Minor penalty.
b) Minor team penalty
c) Simultaneous minor penalty
d) Major penalty
e) Second major penalty
f) Major team penalty
g) Simultaneous major penalty
h) Misconduct penalty
i) Misconduct team penalty
j) Second misconduct penalty
k) Game misconduct penalty
l) Match penalty
m) Second match penalty
n) Penalty shot
o) Goal awarded by decision
p) Game awarded by decision

Article 77 PENALTIES

Aims:

1) To give the team against whom an infraction has just been committed an opportunity at least equivalent to the one it lost due to the infraction that was committed.

2) To oblige both teams to play within the rules of the game.

3) To eliminate from the playing area any individual who refuses to comply with the rules.

Definition: An expulsion from the ice for a given period of time, thus constituting a sanction for a given infraction.

a) Duration: Measured in effective playing time. The more serious the infraction, the longer the duration of the penalty. The elapsed time of the penalty is measured from the moment of the following face-off.

b) Time of imposition: Penalties may be awarded at any time.

c) Formalities:

1) In cases of simple infractions, the guilty or designated player shall go immediately to the penalty bench (Exception: the goaltender).

2) In cases of penalties disqualifying a player from the rest of the game, the player shall go immediately to his dressing room.

3) In cases of simultaneous penalties to both teams, the visiting penalized player shall take his/her place first on the penalty bench at the designated spot, that is to say the farthest possible spot from the opposite team's bench.

4) No goaltender shall be sent to the penalty bench for minor, major or misconduct penalties, but all these penalties shall be served in his/her place by a member of his/her team who was on the ice at the moment of the infraction.

5) A TEAM PENALTY arises when an unidentified player or team representative commits an infraction. It shall be served by a player who was on the ice at the time of the infraction.

6) In the case of a penalty to an injured player, a goaltender or a team, the team representative, via his/her captain or assistant captain, shall rapidly designate a player who was on the ice at the time of the infraction to serve the penalty. If the team representative does not comply rapidly with this rule, the official himself/herself shall designate a player, who was on the ice at the time of the infraction, to serve the penalty.

7) The player designated to serve the penalty shall go immediately to the penalty bench, just as if s/he had personally been awarded the penalty.

Definition: Delayed Penalty

A delayed penalty is in effect when a rule infraction is made by the team who is not in possession of the ball. The penalty is not called until the guilty team gets possession of the ball.

d) If a player receives a major penalty and another player from the same team receives a minor penalty, that team must play 2 players short. If that team is scored on, the MINOR penalty shall end and the player serving the penalty can return to the ice. The major is served in its entirety.

Article 78 MINOR PENALTY

a) A minor penalty requires that the guilty player leave the ice and his/her team play shorthanded, during two minutes of stopped time.

b) When a team plays with a numerical disadvantage caused by one or more minor penalties, and the opponent scores one or more goals, the penalties shall be immediately ended, in a successive and chronological manner, beginning with the penalty that first created the numerical disadvantage.

c) If a player is awarded 3 minor penalties during the same sequence of play, the third penalty becomes a major penalty. The player shall go to the penalty bench to serve a total of 9 minutes of penalties.

Article 79 MINOR TEAM PENALTY

A minor team penalty requires that the penalized team play shorthanded during two minutes of stopped time. This period may be shortened if a goal is scored against the penalized team. The penalty shall be served by a team member who was on the ice at the time of the infraction.

Article 80 SIMULTANEOUS MINOR PENALTIES

a) Minor penalties awarded simultaneous to both teams "DO NOT" cause numerical inequalities. However, the players are not replaced on the ice and neither penalty can be canceled if a goal is scored.
NOTE: Numerical inequalities signify that one team has fewer players on the ice than his/her opponent.

b) If simultaneous minors are assessed during regulation time, the game continues into overtime. The teams will start the overtime period 3 against 3, plus goaltenders. The penalized players will return to the ice surface or teams bench following a stoppage of play after the expiry of their penalty.

c) Any player being assessed a simultaneous double-minor penalty with a player who is getting a minor penalty in the last two minutes of a game or in overtime, the double minor must be served by a second player of his/her team to give a power play to the other team.

Article 81 MAJOR PENALTY

a) A major penalty requires that the guilty player leave the ice, and his/her team play shorthanded during 5 minutes of stopped time, whether a goal is scored or not.

b) When a player receives, at the same time, both a major penalty and a minor penalty, s/he shall begin by serving the major penalty.

c) In the situation where a player is awarded both a minor penalty and a major penalty while, at the same time, a player on the opposite team is awarded a major penalty only, the two players shall take their place on the bench to serve their majors. The player who received the major and the minor will serve both penalties in succession, starting with the major penalty first, then the minor, while the player who received the major will serve the major. The player who received the major and minor penalty will remain in the penalty box for a maximum of 7 minutes.
NOTE: The players are not replaced on the ice surface. Both players return to the ice when their penalties expire.

d) If any player (including the goaltender) receives a major penalty with five minutes or less remaining in regulation or Overtime, s/he will be ejected from the game and suspended for the next scheduled sanctioned game.

Article 82 SECOND MAJOR PENALTY

a) A second major penalty awarded to the same player in the same game shall result in his/her expulsion for the remainder of the game. A substitute shall take his/her place immediately on the penalty bench in order to return onto the ice, in the player's place, after 5 minutes (major); the penalty for the rest of the game shall be considered as a game misconduct penalty awarded to the guilty player.

b) In such a case, the game officials shall submit a written report of the incident to the president of the discipline committee in authority.

Article 83 MAJOR TEAM PENALTY

A major team penalty requires that the penalized team play shorthanded during 5 minutes of stopped time, whether a goal is scored or not. The penalty shall be served by a player who was on the ice at the time of the infraction.

Article 84 SIMULTANEOUS MAJOR PENALTIES

When simultaneous major penalties are assessed, each team will play short-handed (players are not replaced on the ice).

Article 85 MISCONDUCT PENALTY

a) A misconduct penalty requires that the guilty player leave the ice during 10 minutes of stopped time.

b) A misconduct penalty awarded to the goaltender requires that one player, who was on the ice at the time of the infraction take his/her place on the penalty bench. The substitute on the penalty bench shall serve the misconduct penalty.

c) Upon expiration of a misconduct penalty, the player shall remain on the penalty bench until the following stoppage of play, when s/he may return onto the ice.

d) A misconduct penalty awarded to any player (including the goaltender) during the last 5 minutes of regulation or overtime periods shall also automatically signify a game misconduct.

e) In every case of a misconduct penalty, the game officials shall submit a written report of the incident to the president of the discipline committee in authority.

Article 86 SECOND MISCONDUCT PENALTY

a) When a player is awarded a second misconduct penalty in the same game, this second penalty automatically becomes a game misconduct penalty.

b) In such cases, the game officials shall submit a written report of the incident to the president of the discipline committee in authority.

Article 87 MISCONDUCT TEAM PENALTY

A misconduct team penalty involves sending one player from the penalized team who was on the ice at the time of the infraction to the penalty bench to serve the 10-minute misconduct penalty.

Article 88 GAME MISCONDUCT PENALTY

a) A game misconduct penalty results in the guilty player being expelled for the rest of the game.

b) Any game misconduct penalty also involves the player's suspension for the next game, regardless of the time of the infraction.

c) The guilty player's record shall reflect a 10-minute penalty.

d) The officials shall write up a report of the incident and transmit it to the president of the discipline committee in authority.

Article 89 MATCH PENALTY

a) A match penalty involves the expulsion of the guilty player or representative, for the rest of the game.

b) Any match penalty also results in an automatic three game suspension for the person at fault.

c) Whatever sanction the discipline committee may choose to award, the penalized player may not resume activity after the suspension until s/he has obtained proper authorization from the discipline committee.

d) For any match penalty, the officials shall submit a written report of the incident to the president of the discipline committee in authority.

e) Every time a match penalty has been awarded, the guilty player's team shall also send to the penalty bench a player who was on the ice at the time of the infraction to serve a five-minute major penalty.

f) For any match penalty, whatever time the infraction occurred at, the guilty player's record shall reflect a 10-minute penalty.

Article 90 SECOND MATCH PENALTY

a) A second match penalty awarded to a player in the same season shall result in an automatic minimum five (5) game suspension.

b) Whatever suspension the discipline committee should choose to award, the penalized player may not resume activity after the suspension until he has obtained proper authorization from the discipline committee.

c) The game officials are required to submit a written report of the incident to the president of the discipline committee in authority.

Article 91 PENALTY SHOT

NOTE 1: The clock is stopped during a penalty shot.

NOTE 2: If an infraction calls for a penalty shot, no other minor penalty is assessed.

NOTE 3: In the event a player is unable to take a penalty shot due to injury, a team-mate on the ice at the time of the infraction shall be designated to take the shot.

a) Procedure: The player entitled to the shot has two choices and must make his/her choice known to the referee immediately following the call, at the referee's request. The choices are:

1) The referee shall place the ball on the centre face-off spot and the player, on instruction from the referee, plays the ball from there and attempts to score on the goaltender. The ball must be kept in motion towards the opponent's goal line and once shot, the play shall be considered complete. A goal cannot be scored on a rebound. The goaltender must remain in the crease until the ball has crossed the adjacent blue line; if this rule is violated the player designated is entitled to take the shot over.
2) The referee places the ball twenty-five (25) feet from the opponent's goal line, directly in front of the goal. The player shoots the ball from this point at the goaltender. The goaltender may not come out of the crease.

b) In both of the above all other players must be on the opposite side of the centre red line from which the penalty shot is being taken.

c) If a goal is scored during the penalty shot, any previous penalties are not cancelled.

d) The face-off after an unsuccessful attempt takes place at either end face-off spot of the penalized team.

(Metric conversion based on: 1 inch = 2.54 cm.)

Article 92 GOAL AWARDED BY DECISION

When the defensive team's goaltender has been removed from the ice or is not in front of his/her goal, and is unable to block a direct shot to his/her goal, and an attacking player is in the clear with the ball in his/her opponent's territory, with no defensive player between himself/herself and his/her opponent's goal, a goal shall be awarded if:

a) This player is hampered by an opponent having illegally entered onto the ice.

b) The ball carrier is illegally hindered from behind, thus preventing him/her from having a clear shot at the open goal.

c) A defensive player throws his broom or any other object, even if it does not reach the ball carrier.

d) A defensive player intentionally dislodges the net.

Article 93 GAME AWARDED BY DECISION

a) The official may, when specified by the regulation, award the game to the non-guilty team.

b) The game officials shall submit a written report of the incident to the president of the discipline committee in authority.

c) Any game awarded by decision will result in a score of 2-0. The winning team will receive 2 points (+2) in the standings and the losing team shall lose one point (-1) in the standings.

Article 94 PENALTY PROCEDURES

a) 1st Specification: When a player is awarded a penalty when s/he is in control of the ball, the official shall whistle immediately and proceed to impose the penalty.

b) 2nd Specification: When a player is awarded a penalty while the ball is not in his/her possession, the official shall signal a delayed penalty. The official shall whistle immediately and proceed to impose the penalty when the guilty player's team regains possession of the ball.

c) 3rd Specification: In the event that the same player should commit other infractions in the same sequence of play, whether before or after the whistle, s/he shall serve all applicable penalties consecutively.

g) 4th Specification: When a delayed penalty is signalled and the non-guilty team scores a goal, the goal shall stand and the penalty shall not be imposed, however, all other penalties shall be imposed as usual (this refers to minor penalties only).

e) 5th Specification: If a delayed penalty is signalled and the non-guilty team scores in its own goal, the goal shall stand and the penalty shall be processed in the ordinary manner.

f) 6th Specification: When a team is playing shorthanded as a result of a minor penalty, and the official signals a delayed penalty to the same team, any goal scored by the non-guilty team shall stand. The new penalty shall be awarded and the penalty that initially resulted in the shorthanded situation shall terminate automatically.

Article 95 ARBITRATION MISTAKE

a) An official may modify his/her decision as long as the face-off following his/her decision has not yet taken place.

b) It is acknowledged that the official may involuntarily make a mistake.
Face-off spot: At centre ice, whatever the circumstances.

CHAPTER EIGHT
INFRACTIONS

In the case of conflict between recorded time and a player's penalty time, it is the penalized player's responsibility to ensure that the release time is proper. It is the penalized player's or team's responsibility to ensure a proper timing of penalties assessed to them. If a player stays in the penalty box 20 seconds too long and a goal is scored, neither the goal nor the game can be protested since it is the player's responsibility to ensure the proper time has been recorded by the timekeeper.

Article 96 ILLEGAL SUBSTITUTION

Definition: Any change of players on the ice that does not respect the established procedures.
Sanction: Minor penalty - Delay of game

Article 97 FORBIDDEN ADJUSTMENT OF EQUIPMENT

Definition: Any player delaying the game to adjust, modify or change his/her equipment.
Sanction: Minor penalty - Delay of game

a) If a player must adjust his equipment, s/he shall leave the ice and play shall continue without interruption, with a substitute.

b) The goaltender may, with the officials' permission adjust his/her equipment after a stoppage of play. This measure does not apply to the goaltender at the opposite end of the ice from where the play is in progress.
Sanction: Minor penalty - Delay of game

Article 98 INTERFERING WITH PLAY

Definition: Any player who interferes with the ball while s/he is not on the ice.
Sanction: Minor penalty - Delay of game

If, during a player substitution, the player leaving the ice intentionally touches the ball or makes contact with the ball.
Sanction: Minor penalty - Delay of game

NOTE: If a player is hit by a shot from an opponent whose only intention is to cause a penalty, no penalty is called.

Article 99 FORBIDDEN FREEZING OF THE BALL

Definition: Any player who DELIBERATELY freezes, lifts, carries or closes his/her hand over the ball.
Sanction: Minor penalty - Delay of game

a) 1st Specification: If the player commits this infraction while the ball is in contact with his/her goaltender's crease.
Sanction: Penalty Shot

b) 2nd Specification: If the goaltender, in contact with his/her crease, freezes the ball for more than 3 seconds while no opposing player is in his/her vicinity.
Sanction: Minor penalty - Delay of game

c) 3rd Specification: If a team has pulled their goaltender in favour of an extra attacker and a player from that team freezes the ball in their goal crease.
Sanction: Penalty Shot against the team committing the infraction

d) 4th Specification: If the goaltender freezes the ball on the back of the net in any manner.
Sanction: Minor penalty - Delay of game

Article 100 GOALTENDER IN THE OFFENSIVE TERRITORY

Definition: Any goaltender participating beyond the centre red line.
Sanction: Minor penalty

The goaltender may venture beyond the centre red line TO COMPLETE A PLAYER SUBSTITUTION without being penalized.

Article 101 DELAY OF GAME

Definition: Any player or team who, at any time, deliberately delays the game in any manner.
Sanction: Minor penalty

a) 1st Specification: After a warning by the official, if PLAYER SUBSTITUTIONS are not carried out at a run.
Sanction: Minor penalty

b) 2nd Specification: If a team deliberately delays the game by a series of icings, following 2 consecutive icings by the same team without an attempt at making a play.
Sanction: Minor penalty

c) 3rd Specification: If a player delays the game by **directly sending, hitting or throwing the ball that originates inside the blue line in the defensive zone and leaves the playing surface on or inside the defensive zone blue line.**
Sanction: Minor penalty
Exception: When the ball goes out of play on the players bench.

d) **4th Specification: If a player deliberately delays the game by sending, hitting or throwing a ball that leaves the playing surface outside the defensive zone blue line.**
Sanction: Minor penalty

e) 5th Specification: If a player, even the goaltender, intentionally dislodges the net from its position.
Sanction: Minor penalty
NOTE: If the goaltender dislodges the net intentionally when an opponent has a break-away with no one between him/her and the goaltender, a penalty shot will be assessed.

f) 6th Specification: Any captain or assistant-captain who leaves his/her team bench to talk with the official and then returns to it.
Sanction: Minor penalty

g) 7th Specification: If the goaltender throws, or intentionally lets the ball drop onto the net, to cause a stoppage of play.
Sanction: Minor penalty

h) 8th Specification: Any team that continues to refuse to progress with the ball, that persists in shooting or bringing the ball back into their DEFENSIVE TERRITORY or that continues to regroup in a barricade in front of its net.
Sanction: Minor penalty or Minor team penalty

i) 9th Specification: If a team commits three faults on the same face-off, it will be assigned a Bench Minor penalty for delaying the game. A player who has made a fault on a face-off cannot return to perform this same face-off.

Article 102 REFUSING TO START PLAY

Definition: Any team that, after being warned by the official, refuses to start play leaves the ice or will not present itself on the ice.
Sanction: Game awarded (see article 93c)

a) 1st Specification: If a team returns to play within 2 minutes of being warned by the official, the official shall proceed with the face-off.
Sanction: Minor team penalty

b) 2nd Specification: If, for a second time in the same game, a team refuses to start play when directed to do so by the official.
Sanction: Game awarded

c) 3rd Specification: If a team is absent at the time the game is scheduled to begin, the officials shall submit a written report of the incident to the proper authority.
Sanction: Game awarded

Article 103 NEEDLESS DISTURBANCE

Definition: Any player who, after being warned by the official, hits the boards with his broom or any other object.
Sanction: Minor penalty

If the official is unable to identify the culprit or if a person in charge is guilty of this offense.
Sanction: Minor team penalty

Article 104 LEAVING THE TEAM BENCH OR THE PENALTY BENCH

Definition: Except in the case of an injured player, any player or person in charge who deliberately leaves the team bench to go onto the ice when it is forbidden for him/her to do so, or any player that, deliberately or not, leaves the penalty bench before the end of his/her penalty(ies) or, who has not received authorization to leave the penalty bench at the end of his/her penalty.

Sanction: Minor penalty or Minor team penalty.
Any goal scored by his/her team shall be refused. Any goal scored by the non-guilty team is valid. Any penalty earned in the meantime shall hold.

a) 1st Specification: If a penalized player leaves the penalty bench voluntarily or by mistake before the end of his/her penalty, whether during play or not.
Sanction: Minor penalty

b) 2nd Specification: If a player returns onto the ice due to a mistake of the penalty timekeeper.
Sanction: Finish serving the rest of the penalty. Any goal scored by his/her team while he is illegally on the ice shall be disallowed. Any goal scored by the non-guilty team is valid. Any penalty assessed in the meantime shall hold.

c) 3rd Specification: If a penalized and injured player returns to his/her team bench before his/her penalty has expired and s/he participates in the play before the penalty has ended.
Sanction: Minor penalty

d) 4th Specification: During the game, the person in charge shall not go beyond the limits of the area occupied by the team bench, including the door used by their team.
Sanction: Minor team penalty.

e) 5th Specification: Any person in charge who goes onto the ice after the game has begun, without permission of the official.
Sanction: Game Misconduct penalty

f) 6th Specification: Any team trainer who goes onto the ice after the game has begun, without permission of the official.
Sanction: Misconduct penalty

g) 7th Specification: The first player of each team to leave the penalty bench or team bench during a fight.
Sanction: Game misconduct penalty.

Article 105 REQUIRED EQUIPMENT AND EQUIPMENT VERIFICATION

Procedures:

a) During a stoppage of play, the official shall verify the equipment worn by any player if so requested by the captain or assistant-captain of the either team.

b) The official shall immediately carry out a precise verification as requested. One measuring per team per stoppage of play shall be allowed. If the equipment proves to be legal, a penalty shall be awarded to the team that requested the verification.
Sanction: Minor penalty

c) Any illegal equipment shall be removed or normalized without delay.
Sanction: Minor penalty

d) If a helmet comes off during play, the player must replace it immediately and securely fasten the chin strap before re-commencing play or go directly to the player's bench without participating in the play.
Sanction: Minor penalty

e) If more than one player of the same team presents themselves on the ice with the same piece of illegal equipment, and this illegality originates with the manufacturer of the article, the official shall award only one minor penalty per team and submit a written report of the incident to the League president.

f) If the measuring has been requested immediately following a goal scored with an illegal broom.
Sanction: Refuse the goal and assess a minor penalty to the player at fault.

d) If a player who is determined to have illegal equipment other than a broom, is on the ice at the time of the goal, or scores a goal, the goal shall be valid.
Sanction: A minor penalty shall be assessed for illegal equipment.

h) If a player refuses to have a piece of equipment measured.
Sanction: Minor penalty and refused goal if applicable.

Article 106 FORBIDDEN OR ILLEGAL EQUIPMENT

A) ILLEGAL PIECES OF EQUIPMENT

Definition: All pieces of equipment that do not conform with stipulated rules and are used or worn by a player on the ice.
Sanction: Minor penalty; in all cases the piece of illegal equipment shall be modified or replaced.

a) All pieces that do not conform to stipulated rules

b) Any broken broom

c) Any broom wrapped in metal wire; or to which has been added any other metal or wooden piece

d) Any protective equipment worn or attached outside the uniform

e) Any unsecured protective helmet after a warning has been given

f) The use of more than one identical number by the same team.

B) FORBIDDEN EQUIPMENT

Definition: All pieces of equipment used by a player on the ice while their use is forbidden in the rulebook.

Sanction: Minor penalty; in all cases the piece of forbidden equipment shall be removed.

a) Shoes bearing spikes or studs, or chemically modified to give traction advantage

b) Hockey pants or baggy breeches (slippery pants - e.g., plastic Cooperalls)

c) Pieces of leather added onto the exterior of the sweater or the pants knees

d) Any protective helmet with a football mask

e) Any glove with a basket, baseball or goalie style trapper

Article 107 PLAYING WITH A BROKEN BROOM

Definition: Any player who participates in the play, in possession of a broken broom or piece of the latter.
Sanction: Minor penalty

Specification: A player with a broken broom must immediately drop all pieces of the broken broom.

Article 108 PLAYING IN POSSESSION OF TWO BROOMS

Definition: Any player in possession of more than one broom. A player may at no time have more than one broom in his/her hands while engaged in the play. Any player may pick up another broom and hand it off (from hand to hand) to another player.
Sanction: Minor penalty

a) The player picking up the second broom may not be involved in the play.
Sanction: Minor Penalty

b) If a player throws, pushes or kicks the broom to another player
Sanction: Minor Penalty

Article 109 ILLEGAL FACE-OFF

Definition: When a player acts illegally during a face-off, it is considered to be an illegal face-off.

a) A player who executes his face-off with an upward broom motion.

b) A player whose actions have led to physical contact during the face-off.
Sanction: Minor penalty

NOTE: The officials have the privilege to remove any player from the face off circle.

Article 110 ILLEGAL INTERPRETATION REQUEST

Definition: Any captain or assistant-captain who requests a rule interpretation while penalized.
Sanction: Misconduct penalty

Only a captain or assistant-captain present on the ice surface and identified as such, is authorized to ask the official for a rule interpretation during the game.
Sanction: Minor Penalty

Article 111 TEAM UNSPORTSMANLIKE CONDUCT

Definition: Any coach who fails in his/her duty to maintain order on his team.
Sanction: The officials impose the appropriate penalties upon the guilty individuals, and shall submit a written report of the incident to the concerned authority.

Article 112 UNSPORTSMANLIKE CONDUCT

Definition: A lack of ethics towards either the opponents or the spectators.

a) 1st Specification: If a player or person in charge uses abusive language towards whomever it may be during a game.
Sanction: Minor penalty

b) 2nd Specification: If the official is unable to identify the person guilty of using vulgar, blasphemous or abusive language.
Sanction: Minor team penalty

c) 3rd Specification: If a player or person in charge, guilty of unsportsmanlike conduct persists in such behaviour or seeks to provoke an opponent into incurring a penalty through the use of threats, abusive language or provocative gestures.
Sanction: Misconduct or Misconduct team penalty

d) 4th Specification: If a player or person in charge makes use of gross gestures or takes part in a fistfight outside the playing surface.
Sanction: Game misconduct penalty

e) 5th Specification: If a player on the ice takes part in a fist fight with a player not on the ice surface.
Sanction: Game misconduct penalty

f) 6th Specification: If a player or person in charge deliberately spits on or at an opponent, person in charge or spectator.
Sanction: Match penalty

g) 7th Specification: No smoking or alcoholic beverages are allowed on the players bench, the ice surface or the penalty bench.
Sanction: Minor penalty

h) 8th Specification: Participating while under the influence. Any player, coach or team representative judged by the officials to be under the influence of alcohol or drugs, shall be sent to the dressing room.
Sanction: Game Misconduct

Article 113 UNSPORTSMANLIKE CONDUCT TOWARDS THE OFFICIALS

Definition: Any player or person in charge who by his/her words or gestures argues a decision or shows contempt towards an official.
Sanction: Minor or minor team penalty; major or major team penalty.

a) 1st Specification: If a player intentionally moves the ball away from the official.
Sanction: Minor penalty

b) 2nd Specification: If the official is unable to identify the person guilty of using blasphemous or abusive language.
Sanction: Minor team penalty

c) 3rd Specification: If the unacceptable attitude or words are continued.
Sanction: Misconduct penalty

d) 4th Specification: If the unacceptable behaviour is continued.
Sanction: Game misconduct penalty or Match Penalty (depending on severity).

e) 5th Specification: If the infraction is committed before or after the game.
Sanction: Game misconduct penalty

Article 114 THROWING AN OBJECT

Definition: The act committed by a player or team representative of throwing an object onto or off the ice.

a) 1st Specification: If it occurs during a stoppage of play.
Sanction: Minor penalty or minor team penalty

b) 2nd Specification: If a player on the ice throws a broom or part of a broom or any other object in the direction of the player in possession of the ball.
Sanction: Major penalty or major team penalty

c) 3rd Specification: If a player throws a broom to a team-mate who has dropped or broken his/her own.
Sanction: Minor penalty
NOTE: When a player on the ice throws a broom in the direction of a player in possession of the ball, on a breakaway with no one between him/her and the goaltender.
Sanction: Penalty Shot

d) 4th Specification: If a team member throws any object at an opposing team member, spectator or official.
Sanction: Match penalty

Article 115 INTERFERENCE

Definition:

1) The action of hindering the advance of an opponent who is not in possession of the ball, except if s/he has just rid himself/herself of it.

2) The action of removing the broom from the hands of an opponent.

3) The action of stopping an opponent whom has dropped his/her broom from recovering it.
   Sanction: Minor penalty
   NOTE:
   1) Defending players have the right to defend their territory and cover the attackers

   2) Attacking players do not have the right to deliberately obstruct in favour of a team-mate who is in possession of the ball.

Article 116 HOLDING

Definition: The act of holding an opponent with one's hand, broom or otherwise.
Sanction: Minor penalty.

Specification: If a player is withheld while s/he is in his/her attacking zone and s/he is deprived from having an open shot on goal with only the goaltender to out-play.
Sanction: Penalty shot

Article 117 TRIPPING

Definition: Any player who places his/her broom, knee, foot, arm, hand, elbow in such a manner as to cause his/her opponent to fall.
Sanction: Minor penalty

a) 1st Specification: If this gesture is made in the defensive zone and deprives a player from having an open shot on goal with only the goaltender to outplay.
   Sanction: Penalty shot

b) 2nd Specification: If a player injures an opponent as a result of tripping him.
   Sanction: Major penalty

c) 3rd Specification: Any player who puts his/her knee to the ice, or bends very low, in order to have an opponent trip over him/her (i.e., submarining)
   Sanction: Minor or Major penalty

NOTE: A match penalty will be assessed if the official feels that there was a deliberate or intentional attempt to injure an opponent as a result of tripping him.

Article 118 SLEW-FOOTING

Definition: Slew-footing is the act of a player or goalkeeper using his/her leg or foot to knock or kick an opponent's feet from under him/her, or pushes an opponent's upper body backward with an arm or elbow,

and at the same time with a forward motion of his/her leg, knocks or kicks the opponent's feet from under him/her.

Sanction: Minor or Major penalty

Article 119 OBSTRUCTIVE FALL

Definition: Any deliberate fall of a player on the ice, whether to reach the ball or not, resulting in the fall of an opponent.

NOTE: If in this gesture a player succeeds in reaching or taking away the ball from their opponent without causing the opponent to fall, the penalty will not be assessed. If this gesture causes the opponent to fall, the penalty will be assessed.

Sanction: Minor or Major penalty

Article 120 HOOKING

Definition: The act of stopping or trying to stop the advance of an opponent by hooking him/her with one's broom or body.

Sanction: Minor penalty

a) 1st Specification: If this infraction is committed against the ball carrier and it deprives him/her of having an open shot on goal with only the goaltender to out play.
   Sanction: Penalty shot

b) 2nd Specification: If the act of hooking results in injury to a player against whom the infraction was committed.
   Sanction: Major penalty

c) 3rd Specification: If the hooking infraction was done with an intent to injure.
   Sanction: Match penalty

Article 121 SLASHING

Definition: The act of hitting an opponent or his/her broom with one's own broom, held in one or both hands, and with the intent of hampering his/her progress.

Sanction: Minor penalty

a) 1st Specification: If this gesture is made with force or is made against the goaltender inside his/her reserved zone.
   Sanction: Major penalty

NOTE: No preference shall be shown towards a goaltender involved in an exchange of blows with an opponent.

b) 2nd Specification: If, in slashing, a player injures an opponent.
Sanction: Major penalty

NOTE: A Match penalty will be assessed if the official feels there was deliberate or intentional attempt to injure.

Article 122 KNEEING OR ELBOWING

Definition: An action consisting of hitting an opponent with one's elbow or knee
Sanction: Minor penalty

a) 1st Specification: If this gesture is made violently.
Sanction: Major penalty

b) 2nd Specification: If this action results in an injury to the opposing player.
Sanction: Major penalty

NOTE: A match penalty will be assessed if the official feels that there was a deliberate or intentional attempt to injure.

Article 123 CHARGING

Definition: An action of throwing or hurling oneself on an opponent, or assailing him/her.
Sanction: Minor penalty

a) 1st Specification: If this infraction, is made against the goaltender inside his/her crease or if the player charges an opponent from the rear.
Sanction: Major penalty

b) 2nd Specification: If this gesture causes injury to the opposing player.
Sanction: Major penalty

c) 3rd Specification: If this gesture is an intentional act to cause injury to the opposing player.
Sanction: Match penalty

d) 4th Specification: If this infraction is committed against the ball carrier in his/her attacking zone and it deprives him/her of having an open shot on goal with only the goaltender to out play.
Sanction: Penalty shot

Article 124 HITTING FROM BEHIND

Definition: There is to be no hitting from behind, caused by the use of excessive force.
Sanction: Major penalty

a) 1st Specification: If this gesture is made and deprives an opponent of having a breakaway with an open shot on goal.
Sanction: Penalty shot

b) 2nd Specification: If this action results in injury to the opposing player.
Sanction: Major penalty

c) 3rd Specification: If this action was done in a deliberate attempt to injure.
Sanction: Match penalty

d) 4th Specification: If this action is done directly into the boards.
Sanction: Major penalty and game misconduct

Article 125 CROSS CHECKING

Definition: The act of making contact with an opponent with one's broom holding it with both hands apart on the handle.
Sanction: Minor penalty

a) 1st Specification: If a player cross checks an opponent using violence.
Sanction: Major penalty

b) 2nd Specification: If a player cross checks an opponent above his/her normal shoulder level.
Sanction: Major penalty

c) 3rd Specification: If a player cross-checks a goaltender inside his/her crease.
Sanction: Major penalty

d) 4th Specification: If a player injures an opponent as a result of a cross checking him/her.
Sanction: Major penalty

NOTE: A match penalty will be assessed if the official feels that there was a deliberate or intentional attempt to injure.

Article 126 HIGH BROOM

Definition: The act of contacting an opponent above his/her normal shoulder level with one's broom (including stick on stick contact above the normal shoulder level) OR the act of contacting the ball with the broom above the normal shoulder height.
Sanction: Minor penalty

a) 1st Specification: An intentional act that consists of hitting an opponent with one's broom above his/her normal shoulder level.
Sanction: Major penalty

b) 2nd Specification: If this infraction results in injury to an opposing player.
Sanction: Major penalty

NOTE: A match penalty will be assessed if the official feels that there was a deliberate or intentional attempt to injure.

Article 127 BOARDING

Definition: The action of projecting an opponent against the boards.
Sanction: Minor penalty

a) 1st Specification: If a player is projected violently against the boards.
Sanction: Major penalty

b) 2nd Specification: If the player is injured as a result of being projected against the boards.
Sanction: Major penalty

NOTE: A match penalty will be assessed if the official feels that there was a deliberate or intentional attempt to injure.

Article 128 INTIMIDATING AN OPPONENT

Definition: Any player who whirls his/her broom in the direction of an opponent, without in fact hitting him/her, whether s/he is within reach or not, or who, under the pretext of reaching the ball, whirls his/her broom in a disorderly manner in this direction, with the intent of intimidating an opponent.
Sanction: Minor penalty

Article 129 ROUGHING

Definition: Any player who, in making contact with an opponent, uses brutality or pushes him/her violently away.
Sanction: Minor penalty

a) 1st Specification: If a player uses excessive roughness.
Sanction: Major penalty

b) 2nd Specification: If, after being warned by the official, a team continues to use excessive roughness.
Sanction: Game awarded to the non-guilty team.

c) 3rd Specification: If a player injures an opponent as a result of roughing.
Sanction: Major penalty

NOTE: A match penalty will be assessed if the official feels that there was a deliberate or intentional attempt to injure.

Article 130 FIGHTING

Definition: There is fighting when two players have a fistfight.
Sanction: Major penalty and Game Misconduct

a) 1st Specification: As well, it shall be determined if someone instigated the fighting.
Sanction: Major penalty and Game Misconduct

NOTE: An instigator is a player who, in word, or gesture, provokes or incites an opponent or hits him/her first.

b) 2nd Specification: As well, it shall be determined if there was an aggressor.
Sanction: Major penalty and Game Misconduct

NOTE: An aggressor is a player who, shiftily and hypocritically, assails an opponent.

c) 3rd Specification: When a player throws himself/herself into a fight, already engaged with the intent of assuming the role of peacemaker, or engages in another fight during the same stoppage of play.
Sanction: Game misconduct penalty

d) 4th Specification: When a goaltender leaves his/her crease in the direction of a fight.
Sanction: Minor penalty

e) 5th Specification: The rest of the players who leave their bench to come onto the ice at the moment of the infraction.
Sanction: Misconduct penalty

f) 6th Specification: Any player who kicks an opponent, hits him/her with his/her head, pulls his/her hair, bites or scratches him/her.
Sanction: Match penalty

g) 7th Specification: Any player who intentionally removes his/her helmet to engage in a fight, or at any time during a fight.
Sanction: Game Misconduct penalty

h) 8th Specification: When players belonging to the same team start a fight between themselves.
Sanction: Game misconduct penalty

Article 131 HEAD SHOT

Definition: Any contact to the head of another player by using either a part of the body or equipment.
Sanction: Minor or Major penalty

Article 132 SPEARING / BUTT-ENDING

Definition: The act of hitting or attempting to hit an opponent with one of the extremities of the broom.

a) 1st Specification: If very little or no contact is made with a butt-end or a spear
Sanction: Major penalty
b) 2nd Specification: If the butt-end or spear was done deliberately with the intention to injure an opponent
Sanction: Match penalty

Article 133 ATTEMPTING TO INJURE OR INJURING DELIBERATELY

Definition: Any player who tries to injure or injures deliberately an opponent, a representative or a spectator in any way whatsoever.
Sanction: Match Penalty
a) 1st Specification: If a player uses any part of his/her equipment as a weapon during a brawl or fight or attempts to hit an opponent with his/her broom.
Sanction: Match penalty

b) 2nd Specification: Any player who grips an opponent's mask, helmet or chin protect or using it as an advantage to inflict punishment and or injury
Sanction: Match penalty

Article 134 REFUSAL TO COMPLY

Definition: Any player **or team official** who, after being warned, refuses to follow the officials' directives.
Sanction: Misconduct penalty

a) 1st Specification: When a player does not go directly to the penalty bench once penalized
Sanction: Misconduct penalty

b) 2nd Specification: When a player, after being warned, remains in the officials' crease.
Sanction: Game misconduct penalty

Article 135 THREATENING AN OFFICIAL

Definition: Any player or person in charge who, during a game, tries to intimidate the officials through his/her words or gestures.
Sanction: Match penalty

Article 136 MOLESTING THE OFFICIAL

Definition: Any player or person in charge who, during a game, spits on or at an official, molests him/her, jostles him/her, hits him/her or interferes with his/her work.
Sanction: Match penalty and suspension from play until the discipline committee in authority has ruled on further disciplinary action.

NOTE: A written report of the incident and the resulting suspension assessed must be filed with the Canadian Broomball Federation.

Article 137 ABUSE TOWARDS EMPLOYEES AND DIRECTORS

Definition: Any criticism, discussion, threat or gesture made against an employee of the Corporation.
Sanction: Match penalty

Article 138 THREATENING OUTSIDE OF THE GAME

Definition: Any player or team representative who, in words or gestures, attempts to intimidate the official or coach.
Sanction: The guilty player or team representative shall be suspended indefinitely and his/her case brought before the Discipline Committee in authority.

Article 139 AGGRESSING OUTSIDE OF THE GAME

Definition: Any player or team representative who spits on or at, molests, shoves or hits a support person, or interferes with his/her work.
Sanction: The guilty player or team representative shall be suspended indefinitely, and his/her case studied by the discipline committee in authority.

Article 140 ABUSE TOWARDS OFFICIALS AND OFFICERS OUTSIDE OF THE GAME

Definition: Any threat or disgraceful gesture directed at a Corporation employee or officer, at the local, regional, provincial or national level.
Sanction: The person at fault shall be suspended by the Federation.

Article 141 SUSPENSION OF SUPPORT STAFF

In the event of any breach of the present regulation, the support person shall be suspended for an indefinite period and his/her case shall be brought before the Association within 10 days after the incident has been brought to its attention.

APPENDIX A

POLICIES AND PROCEDURES

Categories:

This classifies teams according to their calibre of play. The Senior categories consist of ELITE, INTERMEDIATE and RECREATIONAL. The **Junior** categories consist of U20, U16, U14 and U12.

The minimum age to be eligible to play in the Senior National Championships is **eighteen (18)** years of age. The player must reach their **eighteenth** birthday before the event takes place in order to be eligible. A proof of age may be requested by the Canadian Broomball Federation. All provinces/territories will be responsible to enforce the minimum age limit **for each category.**

NOTE: The "playing season" is defined as the 12-month period beginning September 1st to August 31st of the following year.

1. "ELITE" consists of teams representing their province in the Canadian events, as well as contenders within the province.

2. "INTERMEDIATE" consists of teams whose calibre is inferior to ELITE, but who play broomball in a competitive context.

3. "RECREATIONAL" consists of teams who play broomball for recreational purposes.

4. **"U20"** - players 19 years and under as of December 31 of that playing year. Full Contact.

5. "U16" - players 15 years and under as of December 31 of that playing year. Non-contact. Body checking is not permitted.

6. "U14" - players 13 years and under as of December 31 of that playing year. Non-contact. Body checking is not permitted.

7. "U12" - players 11 years and under as of December 31 of that playing year. Non-contact. Body checking is not permitted.

8. "MIXED" – consists of teams representing their province/territory in the Canadian events. Teams consist of 3 males and 3 females on the ice unless a penalty occurs. Body checking is not permitted.

9. "NON-CONTACT" – consists of teams who play Broomball competitively. Body checking is not permitted.

10. "MASTERS" – consists of teams who play Broomball recreationally. Body checking is not permitted. Players must be at least 40 years of age as of December 31 of that playing year.

Full facemasks are compulsory for all Minor aged players. Half visors or full face masks are mandatory for all other divisions (see Article 28 d).

APPENDIX B

FIRST AID KIT

Recommended Supplies & Equipment:

1 First Aid Kit
2 Towels
4 Antiseptic – wound solution (60 ml or antiseptic swabs – 10 pack)
2 Packages Q-Tip Applicators (not needed if antiseptic swabs are used)
2 Bags – disposable/waterproof –for disposal of blood soiled gauze
24 Bags (Ziplock) for ice application
100 Various Bandages (strips, butterflies, knuckles & fingertip)
8 Bandages – Gauze 2.5cm x 4.5cm (not needed if ties attached to dressing)
8 Bandages – Triangular 100cm folded and 2 pins
8 Dressing – Compress, sterile approx. 7.5cm x 12cm
12 Dressing – Gauze, sterile approx. 7.5cm x 7.5cm
4 Splinter Forceps
1 Manual – First Aid (Bilingual) current edition
1 Pad with shield or tape for eye
2 Scissors – 4" surgical are recommended
2 Tape – Adhesive/Surgical 1.2cm x 4.6cm
8 Rolls "Trainers tape"
3 Rolls "Pro Wrap"
2 Cans "Tuff Skin" pre-taping treatment
38 Styro Foam "Heal & Lace Pads"
1 Pencil Bite-stick
1 Blanket (pocket size) or conventional type
1 Safety Pins – 1 card
6 Pairs disposable latex/vinyl surgical gloves
1 Mask pocket ventilator, O^2 system
1 Package of disinfectant towelettes
1 1 oz tube emercreme burn ointment
1 2 oz bottle of calamine itching lotion
4 Bandage, kling 2 x 5 yds. - 10/pk
4 Bandage, kling 4 x 5 yds. - 10/pk
4 4" tensor bandages
4 6" tensor bandages
1 Pen light
2 Splints
12 Tongue depressors
1 Nail clippers
6 Disposable instant ice packs
2 Containers "Deep Cold" & "Heat" rub

APPENDIX C

DOUBLE OR MULTIPLE TIE-BREAKING SYSTEM

Spirit: To break the equality as soon as possible based on the HIGHEST criteria of the competition.

If there still exists a tie in the standings after having two points for a win and 1 point for a tie (where applicable), the following procedures shall be taken to break this equality.

Note:

In the case of a multi-team tie, if after the application of the tie breaking procedure, in the order listed, a single team is determined to have a "highest standing", that team shall be deemed to have the highest ranking not yet assigned and all remaining teams shall return to the first tie breaking procedure to break the tie between remaining teams.

If after the application of the tie breaking procedure, in the order listed, all but one single team is determined to have a "highest standing", the team not having "highest standing" shall be deemed to have the lowest ranking not yet assigned and all remaining teams shall return to the first tie breaking procedure to break the tie between remaining teams.

Procedure 1
The team that has the most points based on two points for a win, one point for a tie, and one point for an overtime loss considering all games played, shall receive the higher standing.

Procedure 2
The team that has the most points based on two points for a win, one point for a tie, **and one point for an overtime loss** (where applicable) considering games between the teams implicated in the tie, shall receive the higher standing. See APPENDIX E, EXAMPLE #1.

Procedure 3
If equality persists, the team that has the greater difference in goals for and against, considering games between teams implicated in the tie shall receive the higher standing. See APPENDIX E, EXAMPLE #2.

Procedure 4
If equality persists, the team that has most points, based on two points for a win and one point for tie (where applicable), between teams implicated in the equality, in comparison with the highest team in the standing, shall receive the higher standing. If equality still persists, the same shall be made with the second place team in the standings, and so on. See APPENDIX E, EXAMPLE #3.

Procedure 5

If equality remains after applying procedure 3, a comparison of difference in goals for and against, between teams implicated in the equality, and considering the highest team in the standings, shall receive the higher standing. If equality still persists, the same comparison shall be made with the second place team in the standings, and so on, if necessary. See APPENDIX E, EXAMPLE #4 and #5.

Procedure 6

If equality remains, an 8-minute period shall be imposed on the teams involved in order to achieve a final standing. Teams play 3 vs 3 plus goalie. If equality still persists after 8 minutes, 18-minute sudden death period(s) shall be imposed until a winner is declared. See APPENDIX E, EXAMPLE #6 and #7.

Procedure 7

If a multi-team tie persists, the team that has scored the fastest goal, considering all the games played during procedure 5, shall receive the higher standing. See APPENDIX E, EXAMPLE #8.

APPENDIX D

CROSS OVER GAMES – TIE BREAKERS

In the event that an incomplete box results in cross over games at Nationals, the following criteria will be used for teams being tied after round robin play.

1. If equality of two teams within their own box, then head to head results shall determine their standing.

2. If equality of three teams within their own box, head to head results amongst the three tied teams shall determine their placing. If one team has beaten the other two, then they shall receive the higher standing.

3. If all three beat each other, but one team earned more points within in their own box, they shall receive the higher standing.

4. If equality of three teams and the above scenario is not in effect then the best plus/minus amongst the three teams within their own games shall determine their standing.

5. If equality still remains, then the best record against the highest ranked team in their box shall receive the higher standing. If equality still persists, then the best record against the second place team in the box shall determine the higher standing, and so on.

6. If equality still remains, the best overall plus/minus record from all games played in the round robin including cross over games shall receive the higher standing.

7. If equality still remains, then a set of mini games will be played to determine the standings.

APPENDIX E

EXAMPLES OF THE BROOMBALL TIE-BREAKING SYSTEM

EXAMPLE #1 (2 teams tied after round robin play):

Use procedure #1 in the CBF Rule book. The team winning the game between the teams involved in the tie will assume the higher standing

Team A	6 points
Team B	4 points
Team C	4 points
Team D	0 points

Team B defeats Team C by a score of 1 - 0. Team B will be awarded 2nd place.

EXAMPLE #2 (3 teams tied with 4 points):

Use procedure #2 in the CBF Rule Book.

Team A	4 points
Team B	4 points
Team C	4 points
Team D	0 points

Scores of games were:

A - B 1 -0 C - A 1 - 0 B - C 3 - 0

All teams defeated Team D

Team A	for/against	=	0
Team B	for/against	=	+2
Team C	for/against	=	-2

Team B has the best +/- between the three teams and will be awarded 1st place.
Team A will be awarded 2nd place.
Team C will be awarded 3rd place.

EXAMPLE #3 (3 teams tied in points, and have equal +/-)

Use procedure #3 of the CBF Rule Book.

Team A	6 points
Team B	2 points
Team C	2 points
Team D	2 points

Scores of games were:

A – B	1 – 0	B – C	2 – 0
A – C	2 – 0	C – D	2 – 0
A – D	3 – 0	D – B	2 – 0

All teams have been defeated by Team A

Using procedure #3, calculate the +/- for each team involved in the tie

Team B has a +/- of –1 against Team A
Team C has a +/- of –2 against Team A
Team D has a +/- of –3 against Team A

Team B has the lowest +/- difference against Team A and is awarded the highest position (2nd place)
Team C is awarded 3 rd place
Team D is awarded 4 th place.

EXAMPLE #4 (3 teams tied, with equal +/-):

Use procedure #3 and #4 of the CBF Rule Book.

Team A	6 points
Team B	2 points
Team C	2 points
Team D	2 points
Team E	0 points

Scores:

A - B	1 - 0	B - C	2 - 0	B - E	2 - 0
A - C	3 - 0	C - D	2 - 0	C - E	2 - 0
A - D	3 - 0	D - B	2 – 0	D – E	1 – 0

All teams have been defeated by Team A
All teams have defeated Team E

Using procedure #3, calculate the +/- for each team involved in the tie. If all teams have the same +/-, use procedure #4 to break the tie.

Team B has a +/- of -1 against Team A
Team C has a +/- of -3 against Team A
Team D has a +/- of -3 against Team A

Team B has the lowest +/- difference against Team A and is awarded the highest position (2nd).
If Team C and Team D have the same +/-, continue applying procedure #4.
Team C has a better +/- against Team E and is awarded 3 rd place.
Team D is awarded 4 th place.

EXAMPLE #5

Use procedure #5 of the CBF rulebook - this procedure will be followed when breaking ties, when all 3 teams have equal +/- difference. All teams are defeated by Team A by identical scores.

Team A	8 points
Team B	4 points
Team C	4 points
Team D	4 points
Team E	0 points

A - B	1 - 0	B - C	2 - 0	B - E	1 - 0
A - C	1 - 0	C - D	2 - 0	C - E	2 - 0
A - D	1 - 0	D - B	2 - 0	D - E	1 - 0

All teams defeated by Team A
All teams defeat Team E

Team C has the best +/- against Team E and is awarded the highest position (2nd)
Team B and Team D have the same +/- against Team E and are still tied.
The two teams shall play an 8-minute period to decide the final standings. Teams play 3 against 3 plus goaltenders. If equality still persists after 8 minutes, teams play 18 minute sudden death period(s) until a winner is declared.

EXAMPLE #6

Use procedure #5 of the CBF Rule book. This procedure will be followed for breaking ties, when all 3 teams have equal +/- difference. All teams are defeated by Team A by identical scores.

Team A	10 points
Team B	6 points
Team C	6 points
Team D	6 points

Team E	2 points
Team F	0 points

A - B	1 - 0	B - C	2 - 0	B - E	1 - 0	B - F	1 - 0
A - C	1 - 0	C - D	2 - 0	C - E	1 - 0	C - F	2 - 0
A - D	1 - 0	D - B	2 - 0	D - E	1 - 0	D - F	1 - 0

All teams defeated by Team A.
Teams B, C & D defeat Team E by identical scores.
All teams defeat Team F

Team C has the best +/- against Team F and is awarded the highest position (2 nd)
Team B and Team D have the same +/- against Team F and are still tied
The two teams shall play an 8-minute period to decide the final standings. Teams play 3 against 3 plus goaltenders. If equality still persists after 8 minutes, teams play 18-minute sudden death period(s) until a winner is declared.

EXAMPLE #7

Use procedure #5 of the CBF Rule book - this procedure will be followed when breaking ties, when all 3 teams have equal +/- difference. All teams are defeated by Team A by identical scores.

Team A	6 pts
Team B	2 pts
Team C	2 pts
Team D	2 pts

A - B	1 - 0	B - C	2 - 0
A - C	1 - 0	C - D	2 - 0
A - D	1 - 0	D - B	2 - 0

All teams defeated by Team A

The three teams shall play an 8-minute period to decide the final standings. Teams play 3 against 3 plus goaltenders. If equality still persists after 8 minutes, teams play 18-minute sudden death period(s) until a winner is declared.

EXAMPLE #8

Use only if the teams are still tied after the 8-minute games, as in Example #6:

TEAM A - scores first goal at 1 minute and 37 seconds in all 8-minute games played

TEAM B – scores first goal at 2 minutes and 45 seconds in all 8-minute games played

TEAM C – didn’t score in any of the games

APPENDIX F

SIGNALS

To favor the understanding of the game in progress, the officials shall use signals to indicate certain elements to the scorekeeper, coaches, players, organizers and spectators. These signals shall be executed as follows:

ICING

The official situated near the point from which the ball is shot, shall indicate a possibible icing infraction by extending his/her whistle arm above his/her head. The second official (front official) runs in the direction of the ball and blows his/her whistle and raises his/her arm if the icing infraction takes place. The officials that remained behind runs to the face off circle.

INTERFERENCE

The official crosses his/her arms, stationary in front of his/her chest.

MISCONDUCT

The official repeatedly touches both hands to his/her hips, and points to the penalized player.

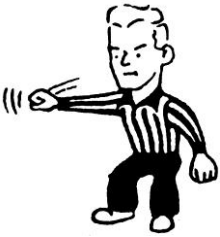

ROUGHING

The official clenches his/her fist and extends his/her arm horizontally out in front of the body.

SLASHING

The official chops his/her forearm lightly with the edge of his/her other hand.

TRIPPING

The official extends his/her right leg forward and strikes it lightly on the side with his/her hand.

CHARGING

The official rotates his/her clenched fists around in front of his/her chest.

BOARDING/CONTACT

The official holds his/her hands close in front of his/her chest, brings his/her clenched fist to strike repeatedly the open palm of the other hand.

HOLDING

Well out in front of his/her chest, the official clasps his/her wrist with the opposite hand.

HIGH BROOM

The official clenches both fists and holds one above the other at his/her forehead level.

OBSTRUCTIVE TRIPPING

The official simulates a blow behind the knee with his/her hand.

HOOKING

The official goes through the motion of pulling towards the body with both hands and arms.

CROSS CHECKING

The official moves his/her clenched fists forward and backward in front of the chest.

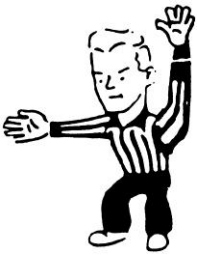

DELAYED PENALTY

The official extends his red-banded arm above his head with his/her hand open to signal a delayed penalty, while his/her whistle hand points once or twice in the direction of the faulty player, until stoppage of play occurs.

UNSPORTSMANLIKE CONDUCT

The official forms a sideways T by pointing the open palm of his/her hand with the fingers of his/her opposite hand.

Kicking The Ball

The official swings the tip of his/her foot forward.

Delaying The Game

The official will tap his/her shoulders with his/her hands.

Kneeing

With both feet on the ice, the official slaps his/her knee with the open palm of his/her hand.

Elbowing

The official taps either elbow with the opposite hand.

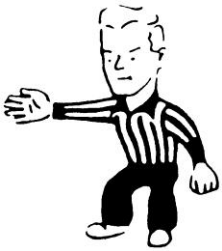

AWARDED GOAL

Whistling, the official points toward the goal with his/her free hand.

BUTT-ENDING

The official creates a cross motion with his/her arms, moving one under the other.

HAND PASS

The official moves his/her open hand forward in a pushing manner.

CALL FOR TRAINER ASSISTANCE

The official brings his/her wrists together to form a cross above the head.

DELAYED WHISTLE

The official extends his/her whistle arm above his/her head, fists clenched to stess his/her whistle.

SPEARING

The official extends both arms vigorously forward to simulate a jabbing motion

CARRYING THE BALL

The official holds one hand open, well out in front, while the other holds back the wrist of the first.

WASH-OUT

The offical sweeps both arms horizontally across the front of the body, at shoulder level, palms towards the ice surface :

a) If the offical makes the movement, it signals that the goal is declined.

b) If both officials make the movement, it signals that there is no OFF-SIDE or no ICING.

TIME OUT

The official forms a vertical 'T' by pointing towards the open palm of his/her hand with the fingers of his/her opposite hand.

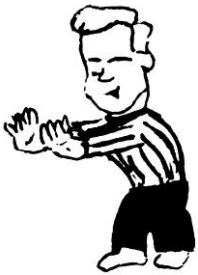

HITTING FROM BEHIND

The official uses a pushing motion with both arms fully extended in front of the body

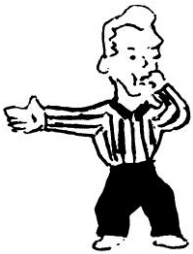

PENALTY SHOT

Whistling, the official points towards center ice with his/her free hand.

MATCH PENALTY

The official pats the top of his helmet with an open hand.

TOO MANY PLAYERS ON THE ICE

The official makes a circling motion with his/her whistle hand. The fingers are pointed down during this motion.

APPENDIX G

BROOMBALL ICE MARKINGS

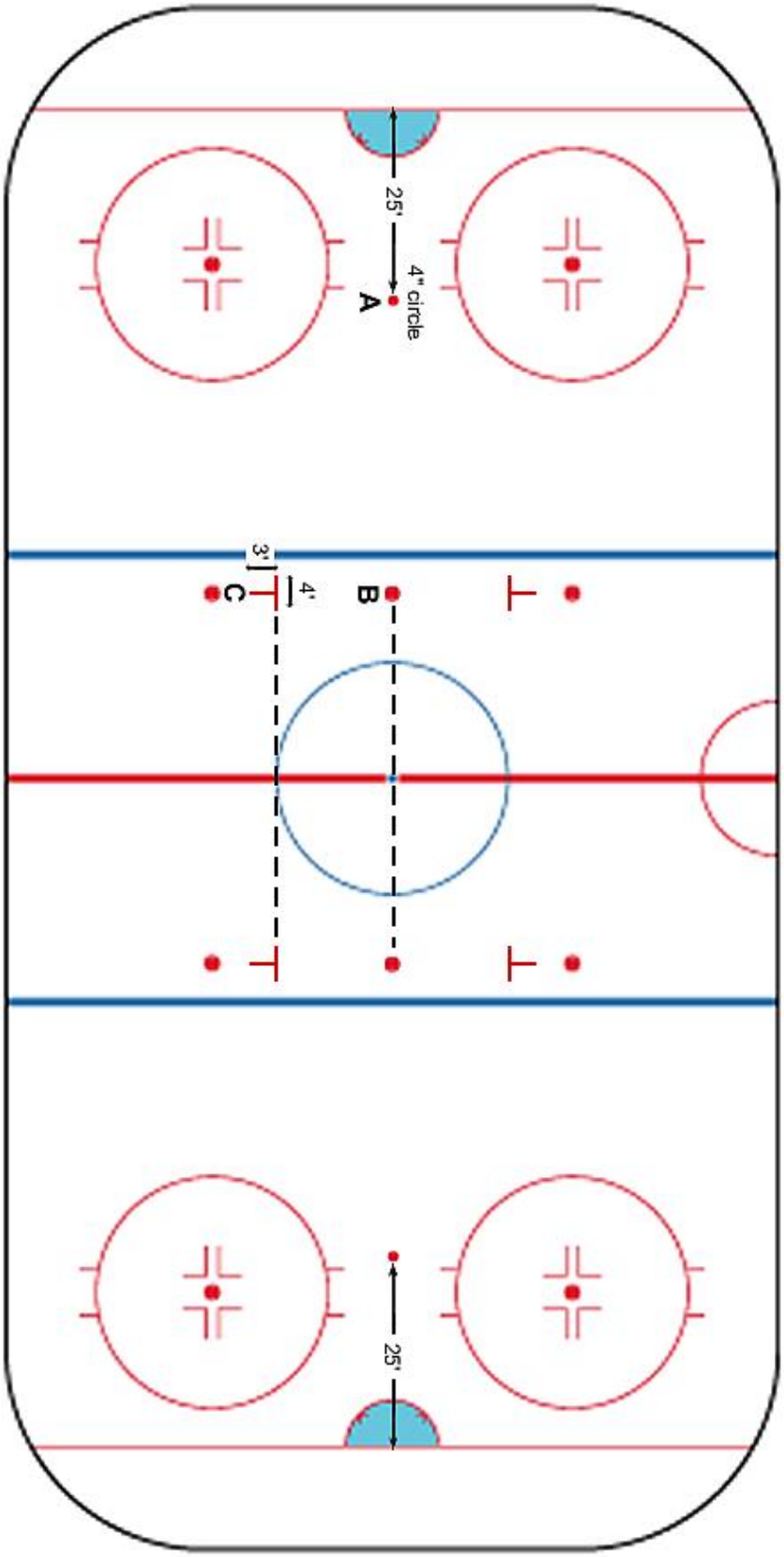

A – Penalty Shot Circle x 2
- 4” circle

B – Neutral Zone Faceoff circle x 2
- Standard faceoff circle size

C – Neutral Zone Restrain lines x 4
- 4’ x 3’
- Lines up with centre ice circle